BURMEIER

Instruction Manual

Lenus
Care Bed

Lenus Care Bed

Last updated: 20/01/2021 288242_V1

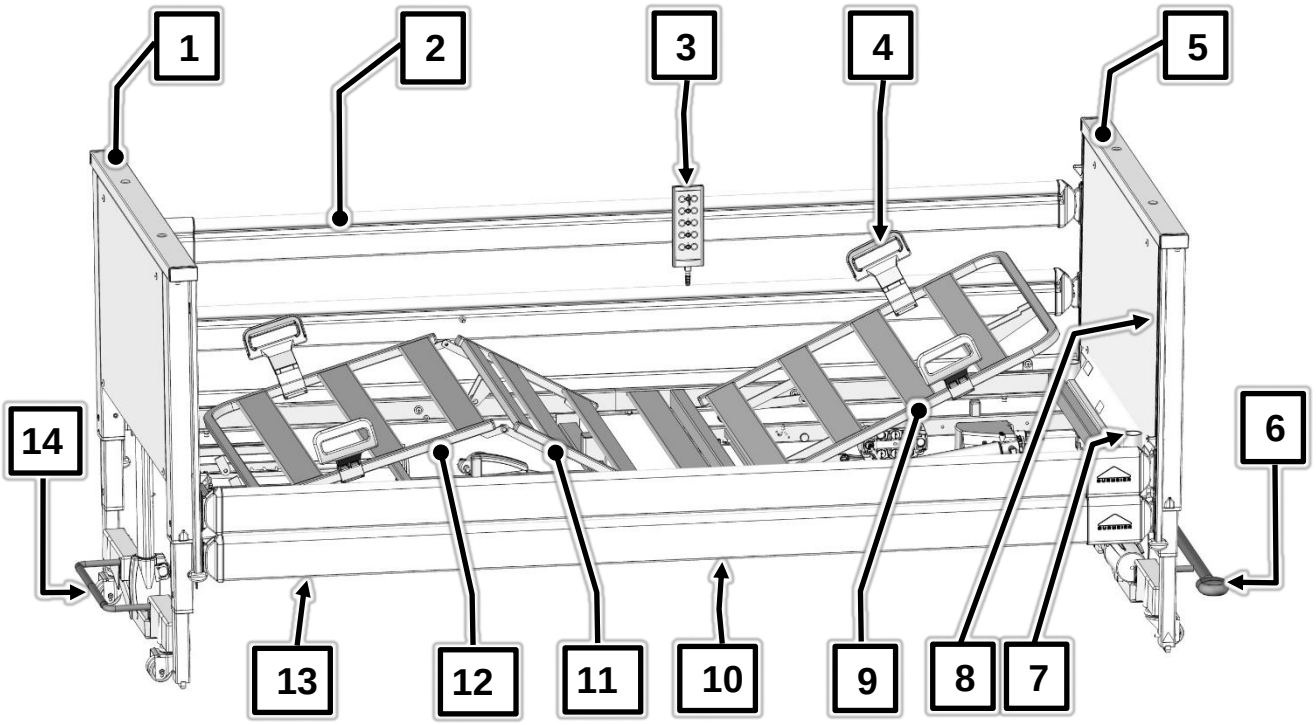

In this instruction manual, numbers and letters that appear in round brackets **()** and **bold type** refer to the care bed's operating devices as shown in this and the following images.

1	Foot section chassis
2	Bars of full-length safety side (DSG)
3	Handset
4	Mattress retainer bar (4x)
5	Head section chassis
6	Individual axle braking (brake lever version, head end)
7	Patient lifting pole sleeves (2x)
8	Guide rails (4x)
9	Backrest
10	Side panel (concealed in the picture)
11	Thigh rest
12	Lower leg rest
13	Screw (2x, concealed in the picture), for releasing the bed extension
14	Individual axle braking (brake bar version, foot end)

Contents

1 FOREWORD 6

2 GENERAL INFORMATION 7

2.1 Definition of the groups of persons involved 8
2.2 Safety information 9
2.2.1 Explanation of the safety symbols used 9
2.2.2 Safety information for the operator 10
2.2.3 Safety information for users and residents 11
2.3 Product description 13
2.3.1 Intended use 13
2.3.2 Use for the intended purpose 13
2.3.3 Contraindications 14
2.3.4 Side effects 14
2.3.5 Particular features of the bed 14
2.3.6 Electric drive system 15
2.3.7 Special electrical features (optional equipment) 15
2.3.8 Special mechanical features (optional equipment) 16
2.3.9 Materials used 16
2.3.10 Structural design 16

3 ASSEMBLY AND PUTTING INTO SERVICE 17

3.1 Tools 17
3.2 Included in the package 17
3.3 Location requirements 18
3.4 Assembling the mattress base frame 18
3.5 Assembling the chassis 19
3.6 Fitting the side panels 21
3.7 Attaching the safety sides 22
3.8 Electrical connection 24
3.9 Connecting the power adapter/power plug 27
3.9.1 Power adapter 27
3.9.2 Power plug 27
3.10 Putting into service 29
3.10.1 Checklist: Inspection by the user 30

4 OPERATION 31

4.1 Tips on using the bed safely in a domestic setting 31
4.2 Moving and braking the bed 32
4.2.1 Individual axle braking 33
4.3 Mechanical adjustment options 34
4.3.1 Lower leg rest (LR) 34
4.3.2 Manual CPR release of the backrest 35
4.4 Electrical adjustment options 37
4.4.1 Special safety information on the electrical drive system 37
4.4.2 Handset 40
4.4.3 Handset for Trendelenburg/reverse-Trendelenburg position (optional equipment) 43
4.4.4 Handset locking functions 44
4.5 Attachments and optional features 45
4.5.1 LED reading lamp* 45

4.5.2 Under bed light* ... 46
4.5.3 Rechargeable battery* ... 47
4.5.4 Patient lifting pole* ... 48
4.5.5 Grab handle* (triangular grab handle) ... 49
4.5.6 Integrated bed extension* ... 50
4.6 Operating the safety sides ... 52
4.6.1 Special safety information for safety sides ... 53
4.6.2 Raising the safety sides ... 55
4.6.3 Lowering the safety sides ... 55
4.7 Removing/installing the safety sides ... 57
4.7.1 Removal ... 57
4.7.2 Installation ... 57
4.8 Comfort mattress base, 90 cm wide (optional equipment) ... 58
4.9 Inserting the mattress ... 59

5 CLEANING AND DISINFECTION ... 60
5.1 General information on cleaning and disinfection ... 60
5.2 Cleaning and disinfection plan ... 61
5.3 Instructing users and staff ... 62
5.4 Cleaning and disinfection agents ... 63
5.5 Handling cleaning and disinfection agents ... 64

6 MAINTENANCE ... 65
6.1 By the user ... 66
6.2 By the operator ... 67
6.3 Replacement parts / Type plate ... 72
6.3.1 Type plate ... 72
6.3.2 PID bar code ... 72
6.4 Service address ... 73
6.5 Replacement of electrical components ... 74
6.5.1 Plug assignment on the control unit ... 74
6.5.2 Replacing the handset ... 76
6.5.3 Replacing the control unit ... 77
6.5.4 Initialising the control unit ... 77
6.5.5 RESET the control unit ... 79
6.5.6 Replacing the motors ... 80
6.5.7 Decommissioning ... 80

7 TROUBLESHOOTING ... 81

8 ACCESSORIES ... 83

9 TECHNICAL DATA ... 84
9.1 Dimensions and weights ... 84
9.2 Adjustment ranges ... 84
9.3 Electrical data ... 85
9.4 Ambient conditions ... 87
9.5 Symbols shown on the product ... 88
9.5.1 Electrical data ... 88
9.5.2 Type plate and PID bar code ... 88
9.5.3 Stickers ... 89
9.6 Information on electromagnetic compatibility (EMC) ... 90
9.7 Classification ... 93

10 DISMANTLING THE BED 94
11 DISPOSAL INSTRUCTIONS 95
12 DECLARATION OF CONFORMITY 96

1 Foreword

Dear Customer,

Burmeier has built this bed to give you the best possible help with the challenges posed by nursing and caregiving. We passionately pursue the goal of developing products that are durable and of a high-quality. Our products should make residents feel as safe and comfortable as possible during their stay in bed and also lighten the workload of care staff and caring relatives. For this reason, the electrical safety and all functions are tested prior to delivery. Each bed leaves our factory in perfect condition.

Correct operation and care are necessary to keep the bed in excellent condition during long-term use. Please therefore read and observe these instructions carefully. They will help you to put the bed into service for the first time and to use it on a daily basis. This instruction manual contains all the information you will need to make it as easy and safe as possible to control and handle this bed, both for you as the operator and for your users. This instruction manual is a practical reference book and should be kept close to hand at all times.

The medical retail trade that delivered this bed is also there to assist you with any questions you may have concerning servicing and repairs during the product's lifetime of use.

This bed is designed to give the person in need of care and all users a safe and practical piece of equipment that provides decisive support with the ever-increasing requirements of care-giving.

Thank you for the confidence you have place in us and our products.

Burmeier GmbH & Co. KG

You are a medical product retailer and would like to get in touch with Burmeier? Feel free to phone us: You can contact our service centre in Germany by phone at +49 (0) 5232 9841 - 0. Customers outside Germany can contact our distribution companies in their respective country if they have any questions. For more information visit:

www.burmeier.com

2 General information

The Lenus care bed, hereafter referred to as the bed or the care bed, is manufactured in various models. This instruction manual has been issued for several bed models. It is possible that certain functions or special features are described which your bed does not have.

Instructions for the operator:

- This care bed fulfils all the requirements of the Medical Device Regulation (EU) 2017/745 (MDR). It is classified as a Class I active medical device in accordance with § 13 of the German Medical Devices Act (Medizinproduktegesetz: MPG).
- Please observe your obligations as the operator in accordance with the Medical Devices Operator Ordinance (Medizinprodukte-Betreiberverordnung, German abbreviation: MPBetreibV), to ensure that this medical product is always operated safely and with no risk of danger to patients, users, or third parties.
- Any item of technical equipment, electrical or otherwise, can prove hazardous if used improperly.
- Read through this instruction manual from start to finish to prevent any injury or damage resulting from incorrect operation.
- Use this bed only as intended by the manufacturer, in accordance with the instructions in this manual.
- You are obliged to instruct users in the proper use of this bed in accordance with MPBetreibV (Operators of Medical Products Ordinance) § 5 (see chapter 4).
- Ensure that users know where this instruction manual is kept, in accordance with the Medical Devices Operator Ordinance (MPBetreibV) § 9!

Instructions for the user:

- Before using a bed, the user must check that the bed is fully functional and in perfect working order, and must observe the instructions in the manual, in accordance with the Medical Devices Operator Ordinance (MPBetreibV) § 2. This also applies for accessories.
- Read through this instruction manual from start to finish to prevent any injury or damage resulting from incorrect operation.
- This instruction manual contains safety information which must be followed! All users working on and with the Lenus bed model must be familiar with the contents of this instruction manual and follow the safety information provided before operating the bed for the first time.

Before using the bed for the first time:

- Remove all transport securing devices and packaging film.
- Assemble the bed from the knocked down assembly units in accordance with the assembly instructions.
- Clean and disinfect the bed before using it for the first time.

Features of the bed

The main features of the Lenus bed are listed below:

Model	Height adjustment range	Safe working load	Type of castor	Castor locking mechanism
Lenus	Approx. 10.5 - 80 cm	225 kg	50 mm double castor	Locked in pairs at the head/foot end

2.1 DEFINITION OF THE GROUPS OF PERSONS INVOLVED

In this instruction manual, the following groups of persons are defined as:

Operator

The operator (e.g. nursing home operators) are all natural and legal persons with property rights to the Lenus care bed. The operator is responsible for the safe operation of this medical device.

The operator can also pass on this responsibility to service providers who work on his behalf (in Germany, it could be that the health insurance operator passes responsibility to the medical supply store, for example).

Care staff/Users

Care staff/users are skilled persons who, based on their training, experience or briefing, are qualified to operate the care bed on their own authority or to carry out work with the care bed, or have been instructed how to handle the care bed. Furthermore, they are able to recognise and avoid potential hazards and assess the clinical condition of the resident.

Residents

In this instruction manual, the term resident is defined as a person who is infirm or in need of care and occupies this care bed.

When the bed is used in a private, domestic setting, it is strongly recommended that the operator or his representative instruct each resident on how to use the bed functions that are important for him/her.

2.2 SAFETY INFORMATION

At the time of leaving the factory, this bed represents state-of-the-art technology and has been tested by an independent testing institute. The most important objective of the safety information is to prevent personal injuries. Property damage will also be prevented.

Only use this bed if you are absolutely certain that it is in perfect working order!

2.2.1 Explanation of the safety symbols used

In this instruction manual, the following safety symbols are used:

Risk of injury to persons

This symbol indicates hazards due to electrical voltages. There is danger to life.

This symbol indicates general hazards. There is danger to life and health.

Risk of damage to property

This symbol indicates possible damage to property. It is possible that damage may occur to the drive, materials or the environment.

Other advice

This symbol indicates a useful general tip. If you follow it, you will find it easier to operate the bed. This tip is provided to give you a better understanding.

Please note:

The safety symbols used are not a substitute for the written safety information. It is important therefore to read the safety information and follow the instructions exactly!

All persons who work on or with this bed must be familiar with the contents of this instruction manual and follow all the safety advice that is relevant for them.

2.2.2 Safety information for the operator

- Please observe your obligations in accordance with the Medical Devices Operator Ordinance (Medizinprodukte-Betreiberverordnung: MPBetreibV), to ensure that this medical product is always operated safely and with no risk of danger to residents, users or third parties.
- Using this instruction manual, which must be provided with the bed, make sure that every user and resident is instructed in the safe operation of the bed before using it for the first time.
- If the bed is used in a domestic setting, leave your contact details with the resident in case they have any questions regarding its use or servicing. (Use the address field on the back cover of this manual).
- Draw every user's attention to the possible hazards that can arise if the bed is improperly used. This applies in particular to the use of electrical drives and safety sides.
- If the bed is in long-term use, test the functions and check for any visible damage (see chapter 6.2) after a reasonable period of time (recommendation: once a year).
- Only persons who have been properly instructed in its use must be allowed to operate this bed.
- Check to ensure that the safety instructions are adhered to!
- Make sure that substitute staff are also sufficiently well instructed in the safe operation of this bed.
- If any additional devices (such as compressors for positioning systems) are attached, ensure that these are securely fastened and are working properly. Pay particular attention to:
  - Safe routing of all loose connector cables, tubing etc.
  - Ensuring that no multiple socket outlets are located under the bed (fire hazard due to ingressing liquids).
  - Chapter 2.3.2 of this instruction manual

2.2.3 Safety information for users and residents

- Ensure that the operator/your medical supply store instructs you in the safe operation of this bed.
- Ask a healthcare professional for advice if you are uncertain about a possible application of safety sides or about the necessity of activating the locking functions of the electrical adjustments.
- Check each time before using the bed to ensure that it is in perfect working order (see also chapter 3.10.1). Ensure that no obstacles, such as bedside cabinets, supply rails or chairs could impede adjustments to the bed.
- If any additional devices (such as compressors for positioning systems) are attached, ensure that these are securely fastened and are working properly. Pay particular attention to:
  - Safe routing of all loose connector cables, tubing etc.
  - Do not use multiple socket outlets placed loosely on the floor. These could cause electrical hazards due to damaged mains cables or the ingress of liquids. If anything is unclear, please contact the manufacturer of the device.
- If any damage or malfunction is suspected, take the bed out of service:
  - Unplug the power adapter from the mains socket immediately.
  - Indicate clearly that the bed is “OUT OF ORDER”.
  - Report this immediately to the operator responsible/your responsible medical supply store (see the address on the back cover of this manual).

Danger

- Route the cable of the power adapter, and also all other cables, in such a way that they cannot be pulled, driven over or damaged by moving parts when the bed is operated.
- Never leave unsupervised toddlers or babies alone with the bed!
  - There is a strangulation hazard due to the possibility of entanglement in exposed connecting cables (such as the power cable and handset cable).
  - There is a risk of suffocation from swallowing small parts which may have become detached from the bed.
- Lock the electrical adjustment functions of the bed if their unsupervised use could put staff or other persons at risk.
- The power adapter cable is fitted with a mains cable holder.
  - Before moving the bed, always make sure that you have unplugged the power adapter from the mains socket. Hang it on the bars of the safety side with the mains cable holder to ensure the power adapter will not fall off and the cable does not trail on the floor.
- Do not place multiple socket outlets under the bed. This could cause electrical hazards due to damaged mains cables or the ingress of fluids.

- Adjust the mattress base to its lowest position before leaving the resident unattended. In this way, you considerably reduce the risk of injury to the resident due to a fall when getting in or out of bed.
- Always ensure that the castor brakes are applied when the bed is not being moved.
- When not in use, stow the handset in such a way that it cannot inadvertently fall off (hang it up by the hook). Make sure that the cable cannot be damaged by moving parts of the bed.
- Adjustments must only be performed by, or in the presence of, a trained person.
- Before carrying out any adjustments, make sure that there are no people, limbs, pets or objects in the way, in order to avoid entrapment hazards and/or damage to property. This applies particularly when mattress base sections are adjusted to a lower height.
- To safeguard against unintentional motorised adjustments, lock the relevant functions of the handset if:
  - the resident is unable to operate the bed safely or to free himself/herself from potentially dangerous situations.
  - the resident could be at risk due to unintentional motorised adjustments.
  - The safety sides are raised (danger that the person's limbs could be trapped when adjusting the backrest and thigh rest).
  - children are left unsupervised in the room with the bed.
- Always ensure that the bed is in its lowest position before leaving the resident unattended in bed. In this way you can minimise the risk of injury should the patient fall out of bed.
- At regular intervals, carry out a visual inspection of the power adapter and cable to check for mechanical damage (scuffing, cracks in the housing, exposed wires, kinks, indentations etc.). Perform such a check:
  - Whenever the cable has been subjected to any mechanical load, e.g. has been driven over by the bed itself or by an equipment trolley.
  - Whenever the cable has been bent, stretched or violently pulled, e.g. due to the bed rolling away while it is still plugged into the switch-mode power supply.
  - Whenever the bed has been moved or relocated and before plugging the power adapter back into the mains socket.
  - Regularly, but at least once a week, by the user when the bed is in constant use.
- Check the strain relief of the power adapter cable regularly to ensure that it is securely fixed.

Observe the safety information found in this instruction manual!

2.3 PRODUCT DESCRIPTION

2.3.1 Intended use

- This bed is used as an aid in the diagnosis, treatment, alleviation and monitoring of illnesses or for compensating for injuries or disabilities.
  For detailed instructions for use, see chapter 9.7
- This bed is suitable only for accommodating adult residents whose height is at least 146 cm.
- The bed itself is not life sustaining or life supporting.
- The bed has no medical indication.

2.3.2 Use for the intended purpose

- This bed was developed as a comfortable and convenient solution for the support and care of infirm persons in need of care in homes for the elderly, nursing homes and comparable medical facilities, and for use in the home.
- The use of this bed in hospitals is only permitted in rooms designed for medical treatment of the application group 0 (in accordance with VDE 0100 part 710, previously VDE 0107). This bed was not designed for any other usage!
- This bed may be intended for care under the supervision of a doctor and be used for diagnosis, treatment or observation of the resident. It is therefore equipped with an option of locking the handset.
- This bed has no special connectors for potential equalisation. Please pay attention to this before connecting additional mains-operated (medical) electrical equipment. If necessary, further advice on additional protective measures can be found:
  - in the instruction manuals of these additional mains-operated electrical devices (e.g. compressed air positioning systems, infusion pumps, enteral feeding devices ...)
  - in the EN 60601-1-1 standard (Safety of Medical Electrical Equipment)
  - in the VDE 0100 standard Part 710 (High Voltage Installations in Hospitals).
- Please refer to the safety information provided in chapter 4.4.4and 4.6.1, particularly where residents are in poor clinical condition.
- This bed is suitable only for accommodating residents (= persons) who are at least 146 cm tall, weigh at least 40 kg and have a body mass index “BMI” greater than 17 (see also chapter 2.3.3).
- Safe working load (explanation of symbol on bed)

225 kg	This bed may be operated without restrictions with a permanent maximum load of 225 kg (resident and accessories).
185 – 215 kg	The permitted weight of the resident depends on the total weight of accessories attached at any time (e.g. respirators, infusions…)

Example:

Weight of accessories (incl. mattress)	**Maximum permitted weight of resident** 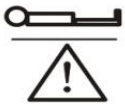
10 kg	215 kg
40 kg	185 kg

- This bed may be operated only by persons who have received instruction in its safe operation.
- This bed is suitable for repeated use. When re-using the bed, pay attention to the necessary requirements:
  - Cleaning and disinfection (see chapter 5)
  - Maintenance/repeat inspections (see chapter 6)
- This bed may only be used under the operating conditions described in this instruction manual. Its use for any other type of application is deemed to be contrary to the intended purpose.

2.3.3 Contraindications

- This bed is not suitable for residents who fall below the following minimum body size/weight:
  - Height: 146 cm,
  - Weight: 40 kg
  - Body mass index[1] "BMI": 17.

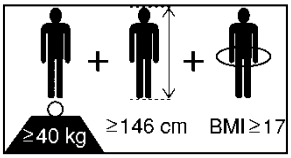

Sticker on the bed chassis

- Particularly when safety sides are used, there is an increased risk of entrapment between the open spaces of the safety sides for residents with a body size/weight that is less than this, since their limbs are smaller.

2.3.4 Side effects

Unless suitable measures are taken, residents who spend prolonged periods in bed may develop decubitus.

2.3.5 Particular features of the bed

- Full-length safety sides on both sides
- Mattress base (LxW): 200x90 cm, 4-section, external dimensions approx. 237x98 cm (depending on model)
- Electrical height adjustment range of mattres base: approx. 19.5 to 80 cm
- Electrical thigh rest adjustment from 0° to approx. 40°
- Electrical backrest adjustment from 0° to approx. 70°
- Electrical adjustment to a reverse-Trendelenburg position of approx. 12°
- Moves on four castors; each pair can be locked separately

[1] **Calculation of BMI** = $\frac{Weight\ patient\ [kg]}{Height\ patient\ [m]^2}$; example: a) $\frac{41\ kg}{1{,}5m \times 1{,}5m} = 18{,}2$ →OK!;
b) $\frac{35\ kg}{1{,}5m \times 1{,}5m} = 15{,}6$→**Not** ok

2.3.6 Electric drive system

The bed's electrical drive system is first-error-secure, flame-resistant (UL94V-0) and consists of:

- Electricity supply via:
    - 230 V mains cable connection **(optional)**. In this case, the 230 V mains supply is transformed to 24 V by the control unit.

      or via
    - an "external" power adapter **(optional)**. The power adapter consists of a voltage transformer and a low-voltage connection cable. The voltage transformer generates a protective low voltage that is safe for residents and users. The power adapter supplies a protective low voltage to the control unit of all drives (motors), via a connection cable.
- The central control unit. All drive motors and the handset are connected to the central control unit via plug connections which work with protective low voltage.
- Electric motors for the backrest and thigh rest
- Two electric motors for adjusting the height of the mattress base
- A handset with an elastic hook

2.3.7 Special electrical features (optional equipment)

- **Electrical setting of Trendelenburg position:** An external operating device (handset) allows medical staff to place the resident in an emergency position whenever necessary.
- **Rechargeable battery** for unrestricted electric emergency operation with full lifting capacity for electric adjustments if a mains connection is not available: can be supplied ready integrated or can be easily retrofitted for temporary use.
- **LED reading lamp:** Energy-saving, no hazardous heating as with conventional lamps, resistant to jolts and vibrations; approx. 50,000-hour lifetime of the LED bulb.
- **Discreet LED night light** under the bed provides orientation for the resident and prevents falls from occurring at night.

2.3.8 Special mechanical features (optional equipment)

- **Removable comfort mattress base** comprises 50 individual spring elements. These elements are designed to mould themselves closely to the shape of the body and help to ventilate the mattress. Their flexibility also ensures that the pressure is optimally distributed. The comfort mattress base also significantly contributes to preventing pressure ulcers.
  Bed extension, integral, extends the bed by approx. 20 cm. In this case, longer safety side bars and side panels and a support base will be needed for the bed.If required, please consult our sales department (see chapter 6.4)

2.3.9 Materials used

For the most part, the bed is manufactured from steel profiles whose surfaces are finished with a polyester powder coating or a metal coating of zinc or chrome.

The head and footboards and safety sides are made of wood or wood-based material with sealed surfaces. All surfaces that can be touched during normal use have been tested for bio-compatibility and are harmless to humans when in contact with the skin.

2.3.10 Structural design

Mattress base

The mattress base is divided into a backrest, a fixed seat section, a thigh rest and a lower leg rest. The rests are adjustable. The mattress base can be raised and lowered horizontally or set to the reverse-Trendelenburg position with the foot end lowered (optional Trendelenburg position also available).

Bed chassis

The bed chassis is constructed from welded steel tubing and is equipped with four castors which can be locked in pairs at the foot and head end of the bed.

3 Assembly and putting into service

This chapter is directed at professionals employed by the operator or medical supply retailer.

3.1 TOOLS

An assembly key is supplied.

To ensure all bed components are securely fixed, all the screws of the bed must be tightened using the supplied assembly key. Tightening the screws by hand is not sufficient and can lead to bed components loosening during operation.

- Tighten all the screws of the bed using the supplied assembly key.

3.2 INCLUDED IN THE PACKAGE

The bed is delivered unassembled, with the parts mounted on a storage aid. Assembly is carried out on site by the operator's technical staff. The assembly work can be carried out by one or two persons.

- Remove all packaging materials and cable ties before starting to assemble the bed. Observe the disposal instructions in chapter 10.

Note: In order to prevent any damage to the bed chassis parts during transport and assembly, the head section chassis and the foot section chassis are each secured with a plastic screw (see 1).

Attention! These screws must remain in place until the chassis have been mounted on the mattress base frame (see chapter 3.5). It is essential that these screws be removed before any electrical adjustments to the bed are made!

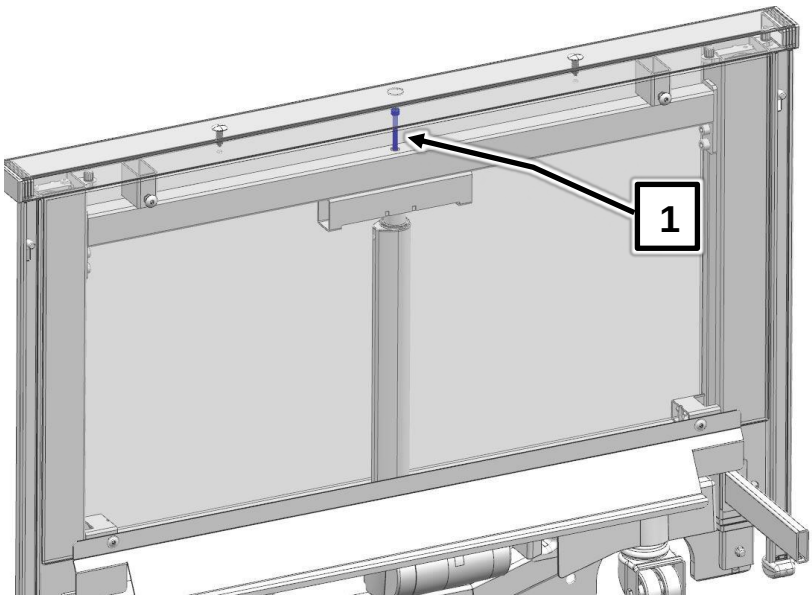

3.3 LOCATION REQUIREMENTS

Note the following safety relevant aspects to take into account when selecting the site of use:

- There must be sufficient room available to accommodate the bed's entire range of adjustments. There must be no furniture, windowsills, sloping roofs etc. in the adjustment path of the bed.
- The space underneath the bed must remain free.
- Before using the bed on parquet flooring, check whether the castors will leave stains on the parquet varnish. The bed can be used on tiles, carpet, linoleum or laminate flooring without causing any damage. BURMEIER is not liable for any floor damage that may be caused by day-to-day operation.
- A properly installed 230 volt mains socket must be available close to the bed (if possible) and available at any time.
- Position the bed so as to allow easy access to the power plug at all times so that the bed can be disconnected from the mains, if necessary.
- If any other additional equipment is attached to the bed, (e.g. compressors for positioning systems etc.), ensure that this is securely fastened and functions properly. Pay special attention here to the safe routing of all loose connector cables, tubing etc. If you have any queries or concerns, consult the manufacturer of the additional equipment or BURMEIER.

Damage to flooring

Damage to the flooring during assembly and dismantling of the bed may be caused by the sharp edges of the chassis or the mattress base.

- Carefully assemble or dismantle the bed on protective covers to prevent damage to the flooring.

3.4 ASSEMBLING THE MATTRESS BASE FRAME

Proceed as follows to install the mattress base frame:

1st Remove the safety side bars and the patient lifting pole from the storage aid and set them aside for the time being.

2nd Remove the two halves of the mattress base frame from the storage aid.

3rd Carefully place the head-end half and the foot-end half of the mattress base frame onto the floor. The four mattress retainer bars should face upwards, while the two drives face downwards.

4th Then fit the two halves of the mattress base frame together.

5th Set the long side of the mattress base frame on the floor and rest the frame against the wall.

6th Remove the four long screws from the storage aid and use them to fix the two halves of the mattress base frame together (in the middle).

7th Now carefully lay the assembled mattress base frame flat on the floor.

3.5 ASSEMBLING THE CHASSIS

Warning

Danger due to Trendelenburg position

Failure to comply could result in serious injury to the person lying in bed. The two chassis [1] and [9] should not be confused! A mix-up will lead to an unwanted Trendelenburg position instead of a reverse-Trendelenburg position.

- Take care not to confuse the two chassis when assembling the bed.
- Observe the different labels for identification of the two chassis. These are located centrally on the cross tubes, near the holder for the drive motor and centrally on the cross tubes of the mattress base frame.

Adhesive label on the head section chassis	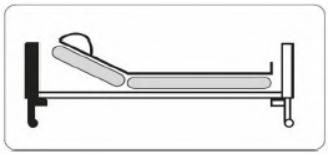
Adhesive label on the foot section chassis	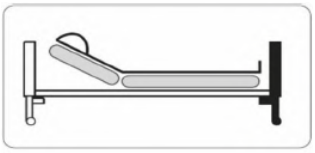

Proceed as follows to attach the two chassis to the mattress base frame:

1st Remove both chassis from the storage aid

- To do so, pull the chassis out of the storage aid.

2nd Connect the head section chassis [9] to the mattress base frame [17]. Make sure that the adhesive labels match!

- To do this, lift the mattress base frame at the head end and slide the two connection pieces of the head section chassis into the tubes of the mattress base frame as far as they will go.
- Pull the head section chassis back out by approximately 10 mm until the holes are aligned one above the other.

3rd Fix the mattress base frame to the head section chassis with 2 long screws (M6x60, supplied with the bed).

4th Repeat steps 2 and 3 with the foot section chassis [1].

5th Check to ensure that the two chassis are securely fixed to the mattress base frame.

6th Remove the plastic screws that secure the two chassis (see 1).

- Use a 5 mm Allen key to remove them.
- Save the plastic screws in case they are needed at a later date.

7th Use the supplied plugs to seal the holes in the chassis (see 2).

Note: The plugs can be found in the bag with the instruction manual.

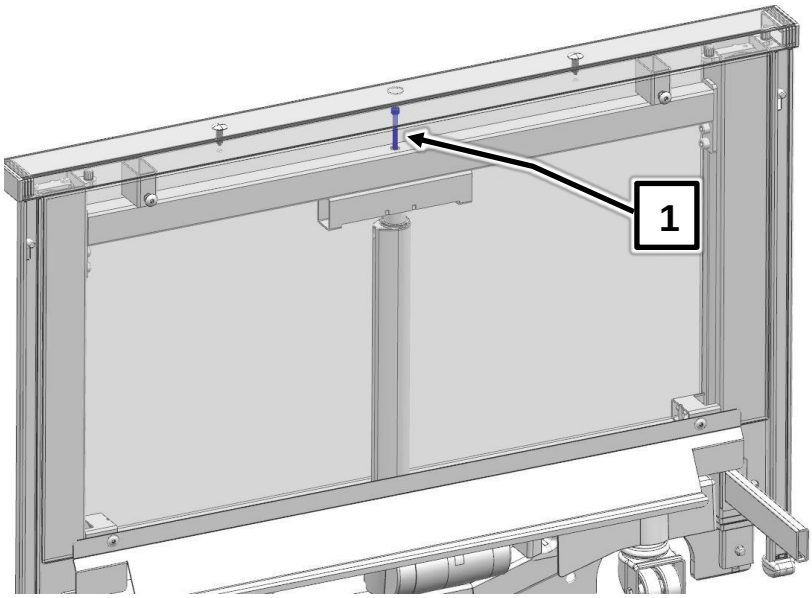
1

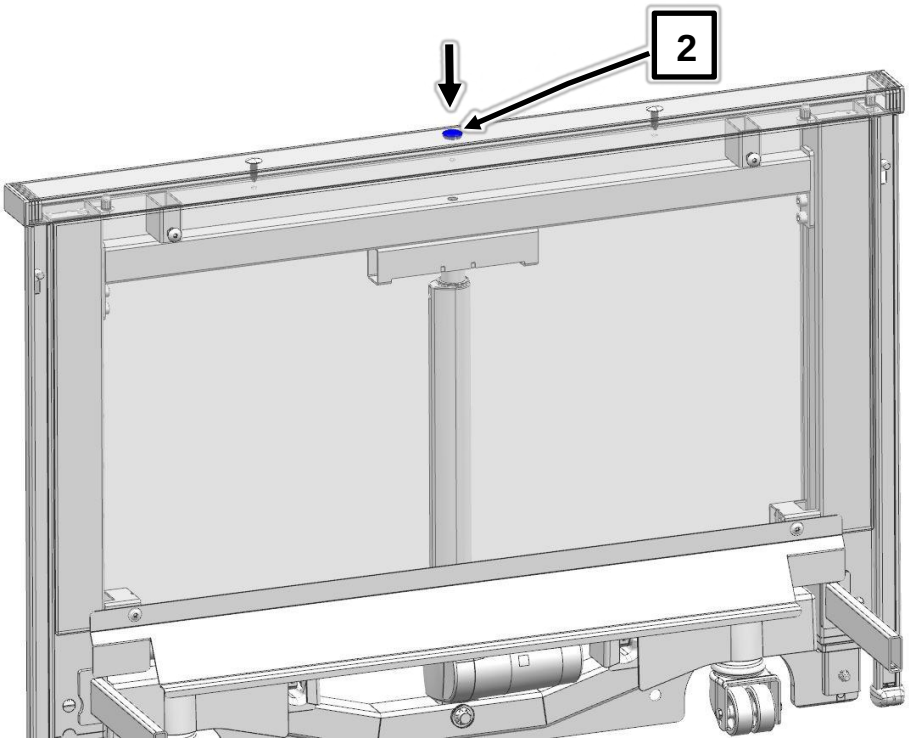
2

3.6 FITTING THE SIDE PANELS

The side panels are fixed to the longitudinal tube of the mattress base using screws.

Proceed as follows:

1st Position the side panel, as shown, along the longitudinal tube of the mattress base 1.

2nd Fasten the side panel to the inner side of the mattress base with the through-bolts and the washers (4x) 2.

3rd Repeat steps 3 and 4 for the other side panel.

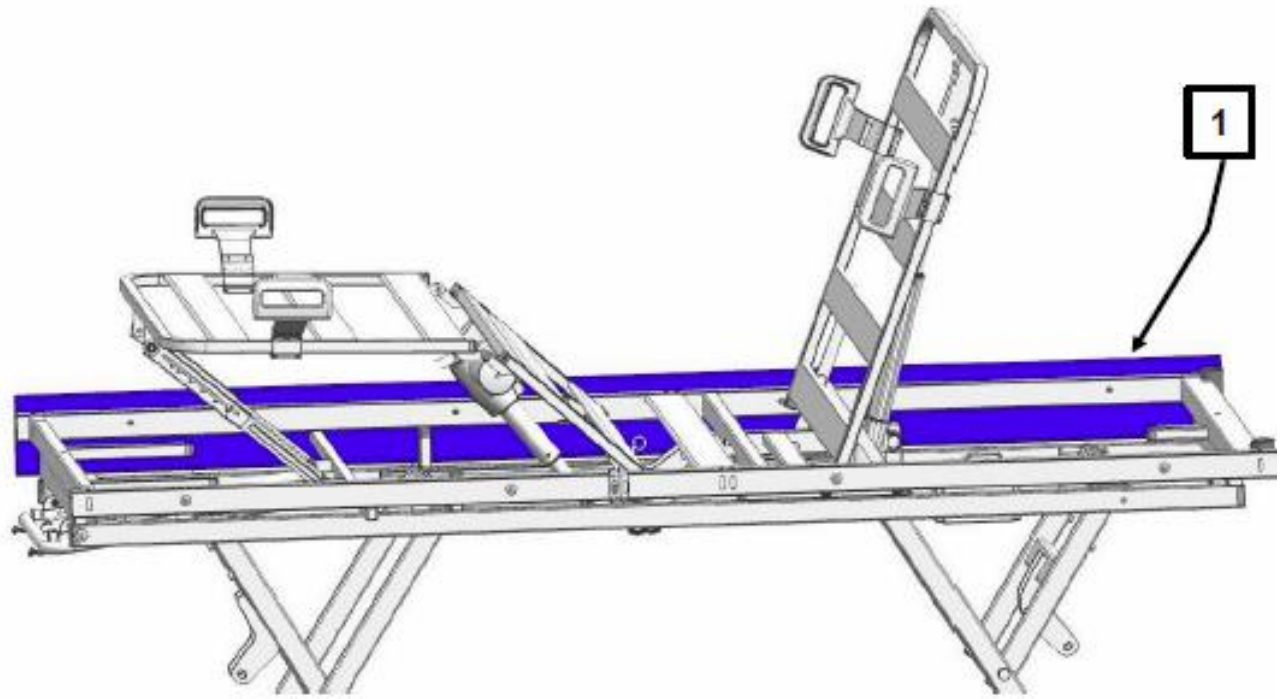

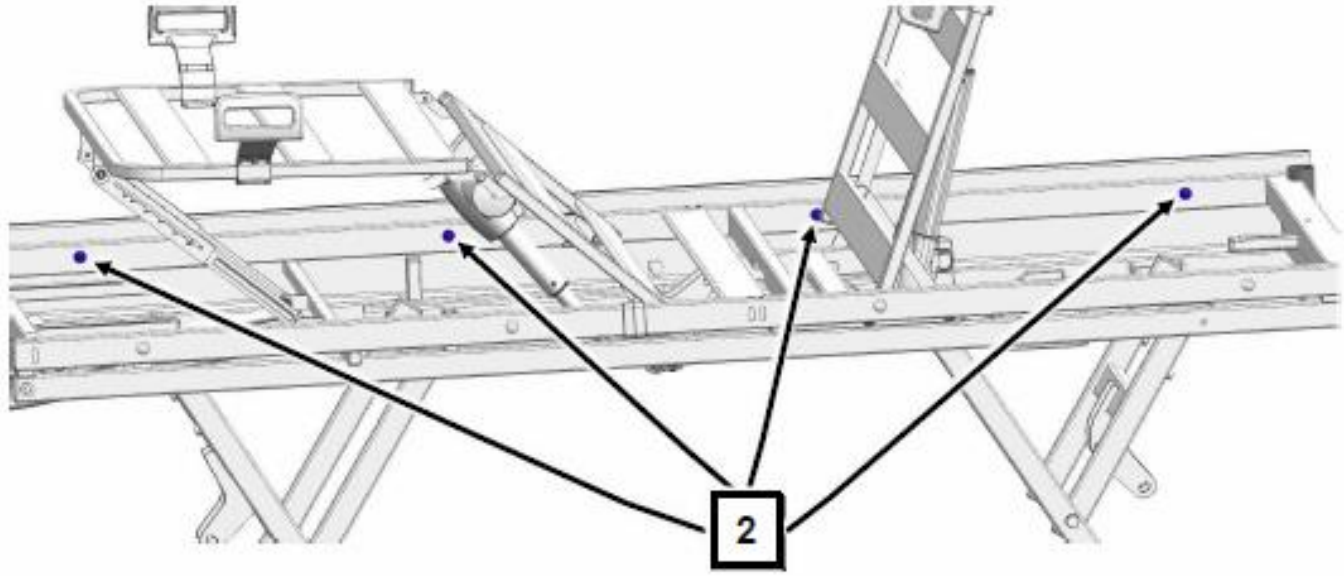

3.7 ATTACHING THE SAFETY SIDES

The bed is equipped with safety sides to protect the resident from accidentally falling out of bed. The safety sides are made of bars with plastic end caps and are attached to the bed with a simple click-on system. If necessary, they can be manually raised or lowered by the carer.
On each chassis [3]+[9] there is one guide rail [11] on the left and one on the right. A safety side guide runs in each of these guide rails. Each guide has two holding devices for the bars. The safety side guides are pre-assembled at the factory. The safety side bars can be quickly attached to the holding devices thanks to the simple click-on system.

Warning

Risk of injury and material damage

Improperly installed safety side bars can fall and damage property or cause minor injuries.

- Use only the safety sides described in this manual. Safety sides are either factory integrated into the bed or available as accessories.
- After installing each safety side bar, check that it is correctly locked into the holding devices.
- Operate the safety sides to check that they are correctly fitted and function properly (see chapter 4.6).

Proceed as follows:

1st Move all the safety side guides to the top position a.

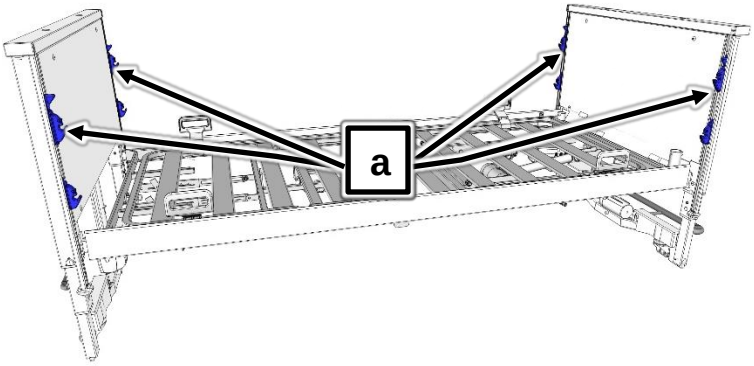

2nd Start with the lower bar: Insert one end of the bar (plastic end cap) into the lower holding device at the head end of the bed.

- Attention: The recess on the safety side bar must face inwards and the rounded side of the bar must face upwards.

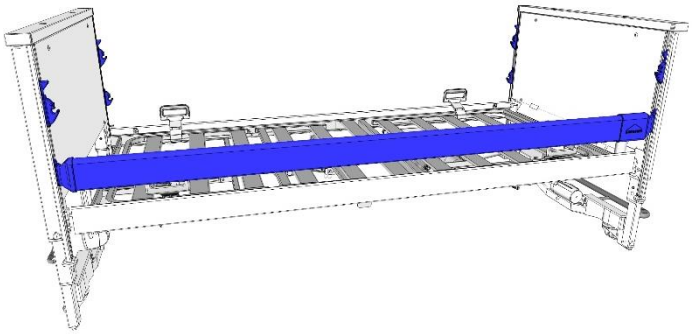

3rd Insert the other end of the bar into the lower holding device at the foot end of the bed.

- The bar must be securely held in place by the release button b.
- Make sure that the bar is properly engaged by jiggling it up and down by hand.
-

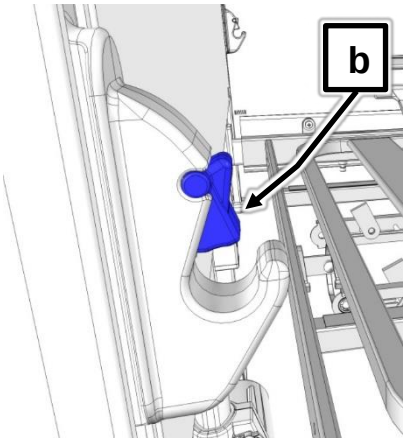

4th Repeat steps 2 and 3 to attach the upper bar.

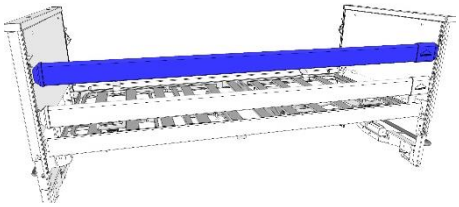

5th Repeat steps 2 and 3 to attach the third and fourth bars, on the other side of the bed.

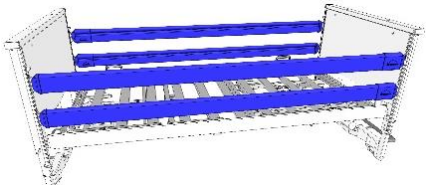

Danger

Attention! After they have been installed, the bars can fall and cause injuries or damage to property if the release buttons [1] are jammed.

- Push and pull the bars to check that they have been locked in place by the release buttons. It should not be possible to push the bars up or down.

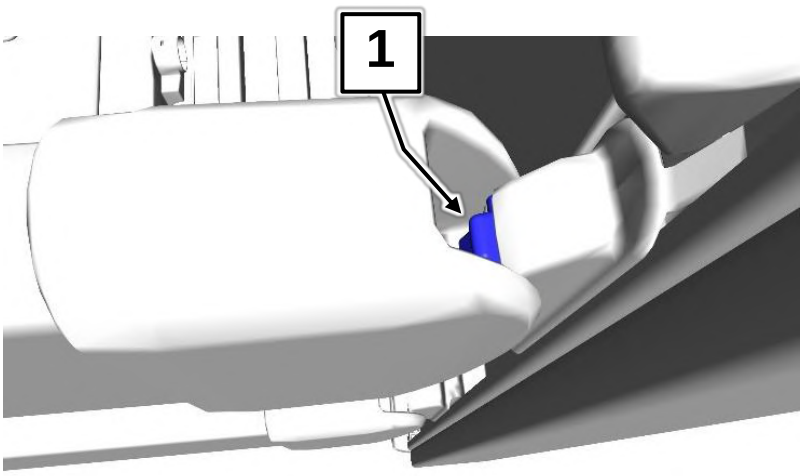

3.8 ELECTRICAL CONNECTION

Before you connect the cables, remove the packaging material from all the cables.
The 4 drive motors are supplied with electricity via the power adapter/power plug. All the drive motor plugs are connected to the control unit during production and are secured with a cover to prevent them from being unintentionally unplugged. The two plugs at the ends of the spiral cable must be inserted into the correct lift motors on the head section chassis and foot section chassis. The plug for the thigh rest motor must be plugged into the thigh rest motor.

When routing the connector cables, ensure that they cannot be damaged by any moving parts of the bed. To ensure that all the cables are laid safely and securely, the underside of the mattress base is equipped with cable holders (see arrows in picture).
Use only these designated cable holders when routing and fixing the connector cables.

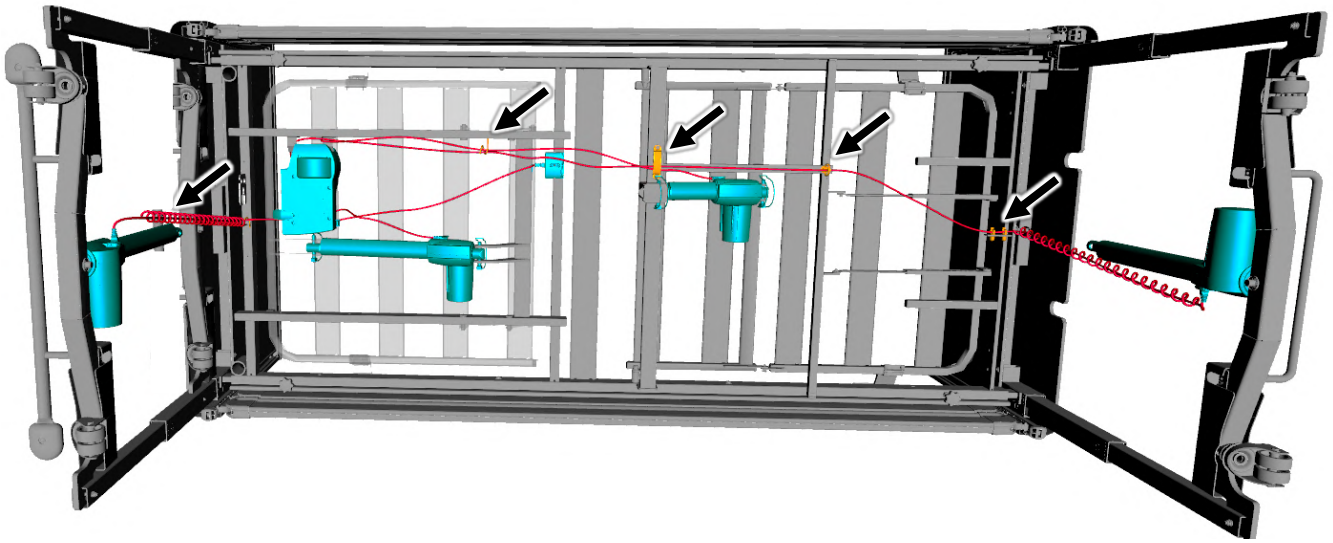

View of the bed from below.

Proceed as follows:

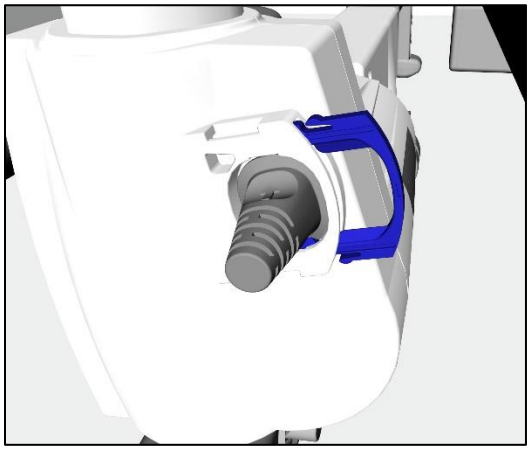

1st Insert the angled plug of the thigh rest motor into the connection socket on the thigh rest motor as far as it will go and secure the plug in place with the pull-out prevention device.

2nd Insert the plug of the head-end lift motor into the connection socket on the lift motor as far as it will go and secure the plug in place with the pull-out prevention device 1.

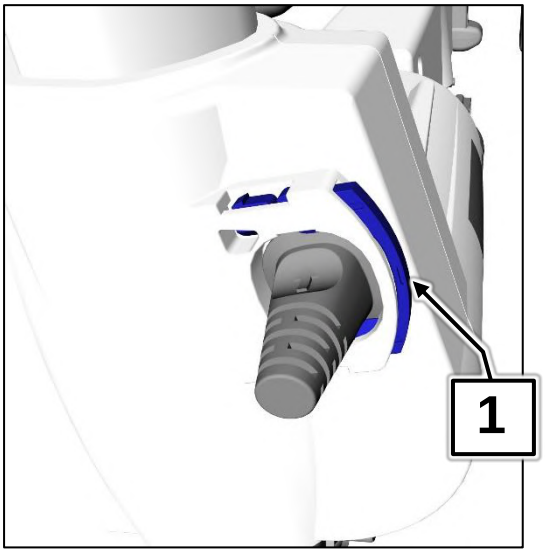

3rd Insert the plug of the foot-end lift motor into the connection socket on the lift motor as far as it will go and secure the plug in place with the pull-out prevention device 1.

4th Only if necessary (usually the connection socket is pre-installed in the factory): attach the connection socket to the strain relief plate, which is located under the mattress base at the head end.

The strain relief plate has two openings: a for beds powered via a power adapter and b for beds powered via a 230-volt supply cable.

5th If a power adapter is used:
Insert the narrow end of the connection socket into the larger opening a of the strain relief plate.

6th If a 230-V cable is used:
Screw the 230-V cable into the smaller opening b of the strain relief plate, as shown. **Attention**: When laying the cable, follow the safety instructions in chapter 3.9.

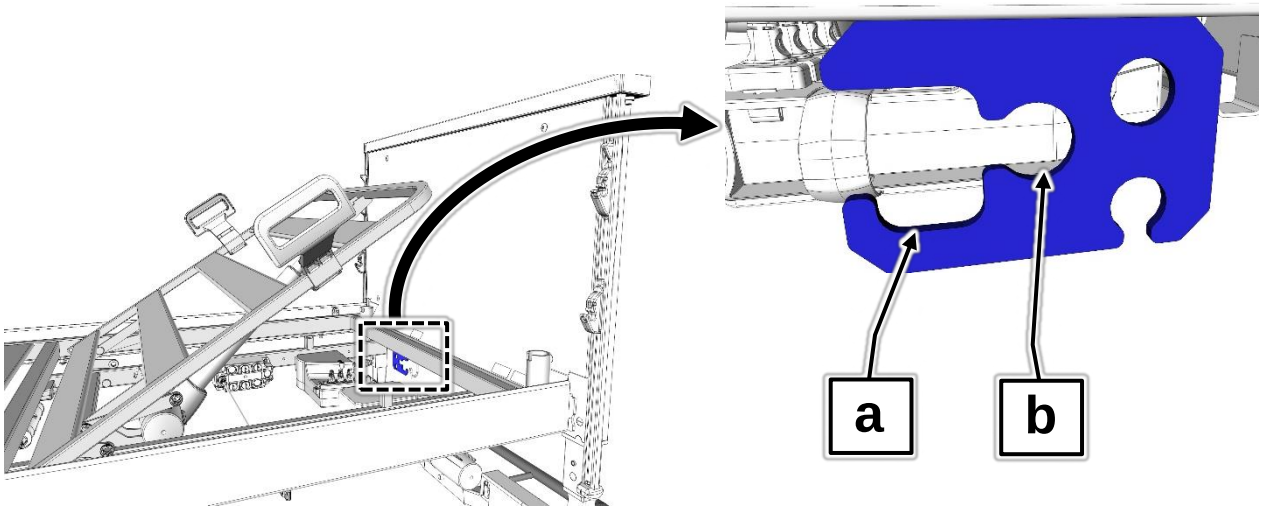

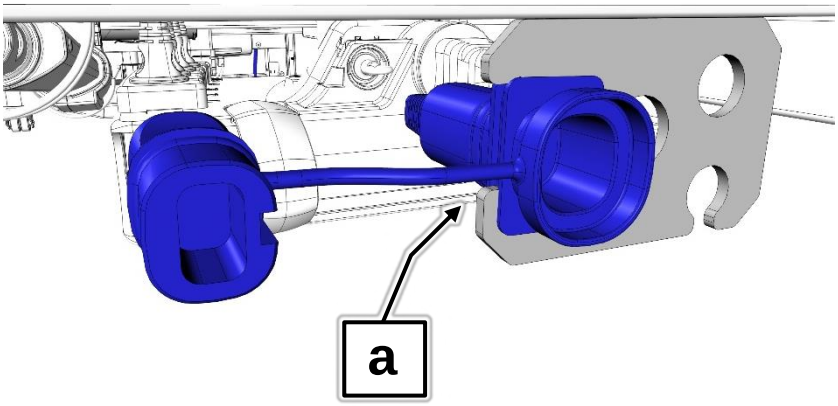

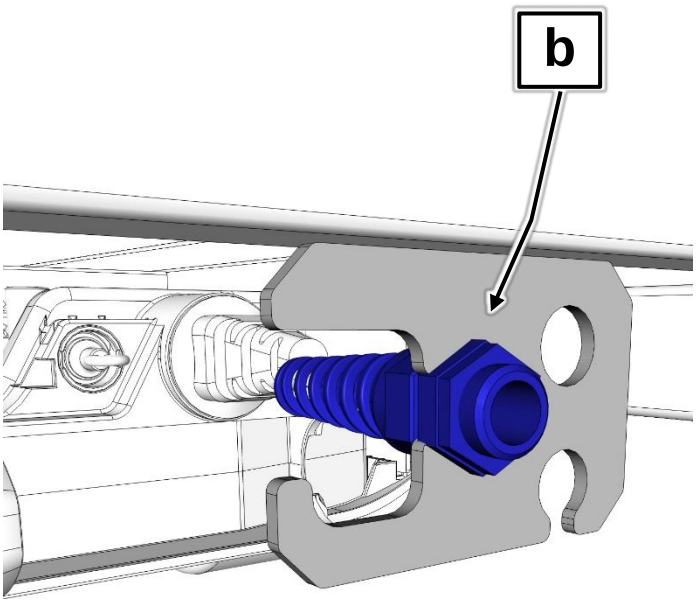

3.9 CONNECTING THE POWER ADAPTER/POWER PLUG

Position the bed so as to allow easy access to the power plug at all times so that the bed can be disconnected from the mains, if necessary.

3.9.1 Power adapter

Proceed as follows:

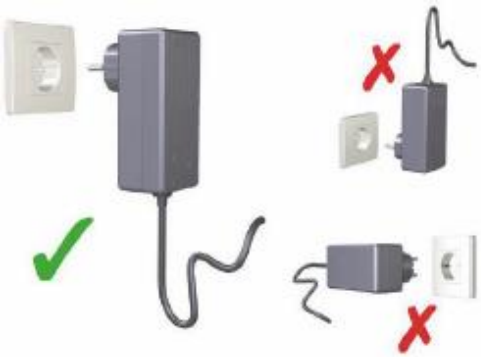

1st Plug the power adapter into a mains socket.

- The cable outlet must hang downwards (see picture).
- Observe the following safety instructions!

2nd Insert the plug of the low-voltage cable into the connection socket.

3.9.2 Power plug

Plug the power plug into a mains socket.

Warning

Damage to property due to routing cables incorrectly

Cables that are incorrectly laid can cause damage to property when adjustments are made to the bed.

- Lay all cables carefully.
- Ensure that no cables are damaged, there are no loops and the cables are not squeezed by moving parts.
- The electricity cable must not be run over by the castors when the bed is moved!
- The cable from the power adapter/power plug **must** be laid to the connection socket at the head end in such a way that it lies between the cross tube and the headboard surround.
  Attention: If the cable is laid underneath the cross tube 1 and/or under the brake lever 2, the cable will be pulled/torn out of the connection socket when the bed is raised.

Right ✓

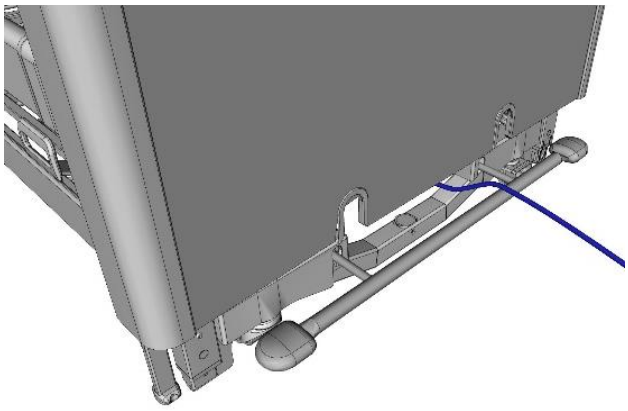

Wrong ✗

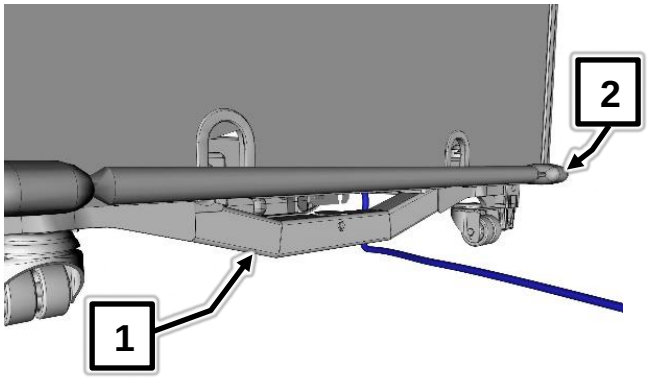

Damage to the power adapter/power plug

Failure to follow this information can result in irreparable defects in the power adapter/power plug and a short-circuit in the mains socket.

Power adapter:

- The mains socket you wish to use for the power adapter must NOT be under the bed. Otherwise, the moving mattress base frame may rip the power adapter out of the mains socket during horizontal adjustments.
- Take care when adjusting the height: maintain a sufficient distance at the side between the bed and the power adapter to avoid damaging it.
- The cable outlet must hang downwards (see picture on the next page).

Power adapter/power plug:

- Before moving the bed, always use the cable holder to hang the power adapter/power plug onto the bars of the safety sides. The cable holder is attached to the mains cable.
- Before moving the bed, think about the length of the electrical cable; unplug the power adapter/power plug beforehand.

3.10 PUTTING INTO SERVICE

It is only necessary to take an electrical measurement before putting the bed into service for the first time if the bed has a 230-volt supply cable. In the case of beds with a 24-volt power adapter, no electrical measurement is necessary, since these beds are tested for electrical safety and functionality by the manufacturer before they leave factory in perfect condition.

Before putting the bed into service for the first time:

- Remove all transport securing devices and packaging film.
- Clean and disinfect the bed.
- Allow the bed to acclimatise to room temperature for about 20 minutes if it was stored beforehand at the lowest or highest permissible temperature (see chapter 9.4on storage temperature).
- Perform an initialisation of the control unit (see chapter 6.5.4).
- After the bed has been assembled, carry out a check in accordance with the checklist in chapter 3.10.1.

Before putting the bed into service each time:

Check that:

- The bed has been cleaned and disinfected.
- The castors are braked.
- The power supply is compatible with the technical data of the bed (230 volt AC, 50/60 Hz).
- Easy access to the mains plug is ensured at all times so that the bed can be disconnected from the mains, if necessary.
- The power adapter/power plug is plugged in and the cable is routed in such a way that it cannot be damaged during bed adjustments or by being driven over.
- The power adapter/power plug, drive cables and handset cable cannot be damaged by moving parts of the bed.
- No obstacles such as bedside cabinets, supply rails or chairs will inhibit adjustments.
- All adjustment functions are in proper working order and have been checked (see chapter 3.10.1).

The care bed may be put into operation only after all these checks have been carried out!

3.10.1 Checklist: Inspection by the user

Check WHAT ?	HOW ?	OK	Not OK	Description of defect
Visual inspection of the electrical components				
Handset	Damage?			
Handset cable	Damage, cables routed away from moving parts?			
Power adapter				
Visual inspection of the mechanical components				
Patient lifting pole, lifting pole sleeves, grab handle with strap (optional features)	Damage, cracks			
Chassis	Damage, deformations?			
Mattress base	Damage?			
Wooden surround	Damage, splinters?			
Safety sides	Damage, deformation, splinters?			
Functional check of the electrical components				
Handset, locking functions	Functional test			
Rests	Functional test			
Height adjustment	Functional test			
Reverse-Trendelenburg position	Functional test			
Special function, adjustment to an even lower position	Functional test: Warning tone and half-speed lowering			
Functional check of the mechanical components				
Castors	Braking, moving			
CPR release of backrest	Test according to instruction manual			
Safety sides	Locked in place, unlocked?			
Accessories (e.g. patient lifting pole, grab handle)	Suitability, secure fastening, damage?			
Inspector's signature:	**Inspection result:**			**Date:**

If damage or a malfunction is suspected, the care bed must be withdrawn from service immediately and disconnected from the mains supply until the defective parts have been repaired or replaced!
Report this immediately to the operator!

4 Operation

4.1 TIPS ON USING THE BED SAFELY IN A DOMESTIC SETTING

Please use the following table to help identify and avoid any unfavourable conditions of use.

Unfavourable conditions of use	Avoid by
Electrical equipment:	
Damage to handsets/connecting cables	Hang the handset on the hook Do not pull the cables right across the bed/do not run over them with the castors
Electrical adjustment functions are not blocked; body parts could be trapped as a result of unintentional activation	Block the functions on the handset if they could otherwise place the occupant or children in danger; do not leave children unsupervised in the room with the bed
Possibility of overheating due to fluff and dust on electrical drive components	If necessary, use a dry cloth to remove dust from the drive components under the mattress base
Pets can eat through electrical cables: this could cause malfunctions and electric shocks	Do not allow rodents to run around freely in the same room as the bed
Safety sides:	
Possibility of trapping/strangulation when using safety sides	When the occupant is particularly small, emaciated or confused: use the safety sides only with additional protection measures or not at all
Interfering devices/objects close to the bed	
Fire hazard due to heat generated by a reading lamp, heater etc.	Use only LED reading lamps that do not heat up Use devices only if they are in good working order and are used in accordance with their operating instructions; keep them at a safe distance from the bed
Collision hazard/damage to property resulting from bed adjustments	Ensure a safe distance from other objects/sloping ceilings/windowsills
Crushed connecting cables or hoses from compressed air positioning systems; inhalers etc.	Route and fix cables and hoses in such a way that they cannot be trapped during bed adjustments

4.2 MOVING AND BRAKING THE BED

The bed is equipped with four lockable castors, which can be braked in pairs (at the head end and foot end of the bed) **(10)**. The bed can be moved within the room even when the bed is occupied.

- A bed that is occupied by someone should be moved around only inside the room. Always avoid moving the bed over long distances along corridors and across thresholds.
- Each time before moving the bed, ensure that:
  - The mains cable cannot be stretched, driven over or damaged in any other way.
  - The power adapter is always hooked onto the safety side bars using the mains cable holder and the cable does not trail on the floor.
  - All cables, tubes or leads belonging to any accessory devices that are attached to the bed are safely secured and cannot be damaged.

  Otherwise the mains cable could sustain damage as a result of being torn off, crushed or driven over. Such damage could lead to electrical hazards and malfunctions.
- **Braking:** In order to brake the bed, always brake all four castors. This is particularly important if the bed and resident are left unsupervised or the bed is on a sloping floor (e.g. on a ramp). A safe and secure bed position must always be ensured!
  - **Exception:** When the bed is to be adjusted to the Trendelenburg or reverse Trendelenburg position
    , either the head-end or foot-end castors must be unbraked. This allows the bed to compensate for the movement of the two lift motors without the castors causing damage to the floor (castor tracks).

4.2.1 Individual axle braking

Brake bar - operated from the foot end

This operates the foot-end castors.

To move the bed:

Lift the brake bar with your foot.

To brake the bed:

Press the brake bar down with your foot.

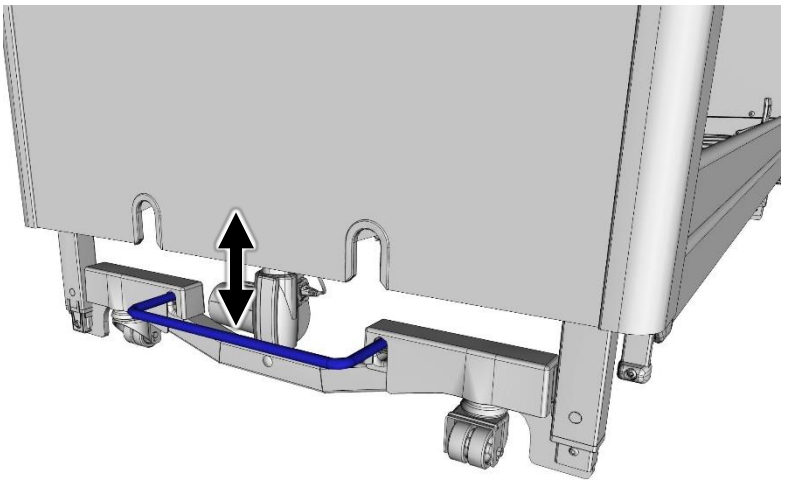

Brake lever - operated from the head end

This operates the head-end castors.

To move the bed:

Raise the brake lever with the your foot.

To brake the bed:

Press the brake lever down with your foot.

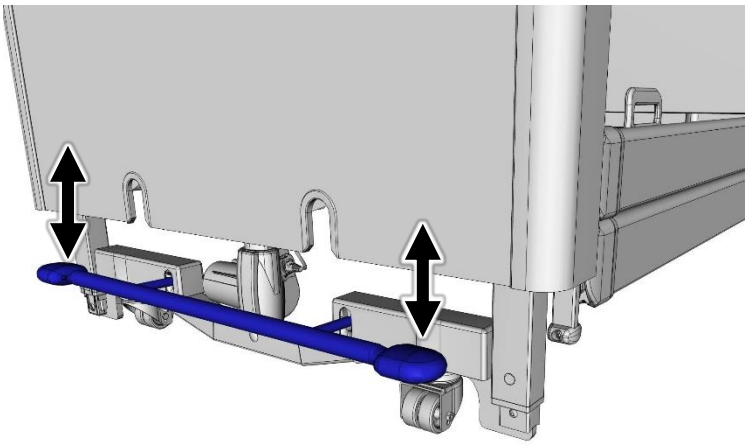

4.3 MECHANICAL ADJUSTMENT OPTIONS

4.3.1 Lower leg rest (LR)

The lower leg rest 1 can be raised and lowered manually when the thigh rest is raised 2.

It is possible to adjust the bed to an orthopaedic (stepped bed) position or so that the lower leg rest is sloping downwards.

Similar to illustration!

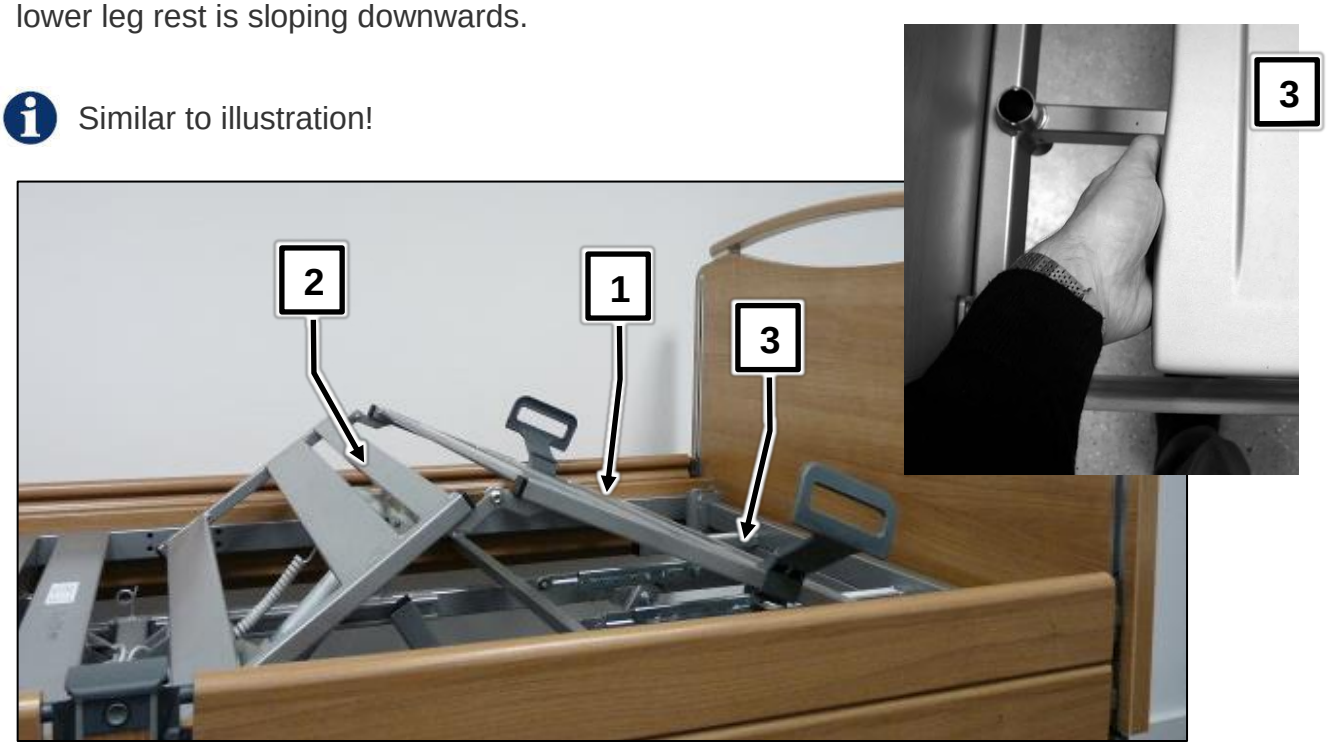

Manually adjusting the lower leg rest (LR)

Raise the thigh rest using the handset.

Taking hold below the frame 3, lift the lower leg rest to the desired position and then release it slowly.

- The lower leg rest engages automatically.

If necessary, correct the bed position using the handset (thigh rest button).

Manually lowering the lower leg rest

Danger

Pay attention to the order of the operating instructions!

- Raise the lower leg rest until it reaches the upper limit stop on the frame.
- Then lower the lower leg rest slowly.
- Risk of crushing! Hold the lower leg rest only at the place indicated 3.
  There is a risk of injury occurring if the lower leg rest falls unchecked.

Lowering the lower leg rest using the handset

If the thigh rest is lowered using the handset, the lower leg rest is automatically lowered as well.

Raising the lower leg rest using the handset

If the thigh rest is raised using the handset, the lower leg rest is automatically moved as well and locks into place in several intermediate positions. When the thigh rest is raised, the lower leg rest remains in position.

4.3.2 Manual CPR release of the backrest

In the event of power supply outages or electrical drive system failures, a raised backrest 1 can be lowered by hand.

Please note: manual emergency release of the backrest must be carried out by **two people**!

Danger

Disregard for this safety information and instructions for use may cause the backrest to fall uncontrollably, which could lead to serious injuries for both the user and the resident!

- The CPR release may only be carried out in the case of extreme emergencies and by users who have a complete command of the procedure described below.
- We strongly advise you to practise CPR release of the backrest several times under normal conditions. In the event of an emergency you will then be able to react quickly and correctly.

Similar to illustration!

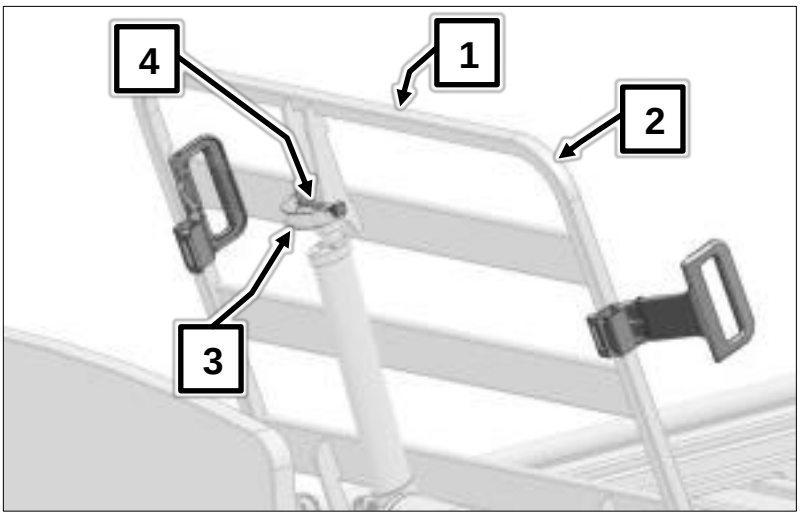

Before you lower the backrest, 1 any load exerted on the backrest must be removed.

- To do this, the first person takes hold of the backrest frame 2 and raises the backrest slightly, keeping it held firmly in this position.
- The second person now removes the bolt 4. To do this, fold back the curved clip 3 and pull the bolt and clip out of the lifting bar of the backrest motor.

- The motor is now disconnected from the backrest.
- Put the motor down on the bed frame.
- After the second person has left the danger zone, the first person (with the help of the second person) lowers the backrest carefully.

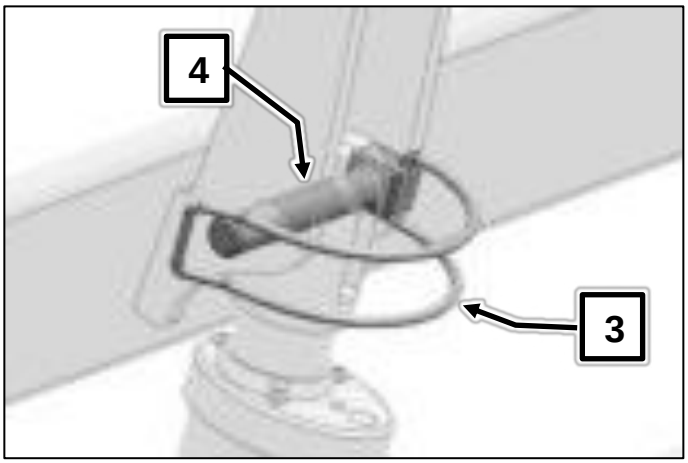

Danger **Hold the backrest firmly when lowering it, as it could otherwise fall unchecked!**

- Now the motor on the lifting bar is no longer connected to the motor connector mount.
- The lifting bar remains in the CPR release position.

Restoring the bed to its original state following CPR release of the backrest

- Raise the backrest by hand.
- Swing the lifting bar up again, use the bolt to secure it in place in the motor connector mount and fold the curved clip back over.

4.4 ELECTRICAL ADJUSTMENT OPTIONS

4.4.1 Special safety information on the electrical drive system

- When making any adjustments to the position of the bed, always ensure that there are no limbs belonging to residents, users, other persons, and especially playing children, that could be trapped underneath the rests or the bed frame.
- Lock the operating functions for the resident on the handset if:
  - the resident is unable to operate the bed safely.
  - the resident is unable to free himself or herself from potentially dangerous situations.
  - the resident is exposed to an increased risk of entrapment during backrest and thigh rest adjustments when the safety sides are raised.
  - the resident could be at risk due to unintentional motor-driven adjustments,
  - children are left unsupervised in the room with the bed.
- Each bed is delivered with a handset locking key, which is supplied in an envelope together with this instruction manual. The locking key is not intended to be used by the resident. The locking key should remain with the user for safekeeping.
- When using accessories on electrically adjustable beds, the following applies: Make sure that the arrangement of accessories does not produce any crushing or shearing zones for the resident when the back and leg rests are adjusted. If this cannot be guaranteed, the user must safely prevent the resident from adjusting the back and thigh rests.
- Ensure that the power cable and handset cable cannot be trapped or damaged in any way.

- Before moving the bed, always make sure that you have unplugged the power adapter from the mains socket. The power adapter must not fall down or touch the floor. Failure to observe this may result in permanent damage to the power adapter.
- Each time before moving the bed, ensure that the mains cannot be stretched, driven over or damaged in any other way. The power adapter must always be hooked onto the safety side bars using the mains cable holder before the bed is moved.
- To avoid damage, ensure that there are no obstacles such as furniture, windowsills or sloping ceilings that could collide with the bed when adjustments are made. This will help to prevent damage.
- Patient lifts or other equipment can be wheeled under the bed. If the mattress base is at the lowest height, take care not to damage the drive components of the bed – if in doubt raise the mattress base by about 10 cm before using the patient lift.
- Ensure that the 24-volt supply cable and the handset cable cannot be driven over or otherwise crushed when the bed is moved.

- Motorised adjustments are only possible if the bed is properly connected to the mains supply.
- If the load is too high, an electronic overload switch is activated and the control unit is automatically switched off. When the overload has been removed, the drive system can be reactivated by pressing a button on the handset.
- Continuous operation must not exceed two minutes! After this time, a rest period of at least 18 minutes must be observed. (Alternatively: one minute continuous operation followed by a nine minute rest period etc.)
- For safety reasons, if the maximum continuous operation time is purposely disregarded, a thermal safety device will cut off the power supply to prevent the drive system from overheating due to someone continuously “playing” with the controls. After a short cooling off period, the system can be reactivated.
- The adjustment range for all functions is electrically/mechanically limited to the permitted ranges.
- As with every electrical device, even if all the specified limiting values are observed during operation, disruptions from and to other closely situated electrical devices cannot be ruled out (e.g. “crackling” in a radio). In such cases, increase the distance between the devices. Switch off devices temporarily if they are suffering from interference.

Danger

Risk of injury due to safety side guides and safety sides.

When adjusting the bed to its lowest position (3 cm above the floor), please note the following:

- **Safety side guides**: if you adjust the bed to its lowest position while a foot is directly below the safety side guides 1, feet and limbs could be crushed and injured.
- **Safety sides**: if you adjust the bed to its lowest position when the safety sides have been lowered 2, feet must be kept clear of the area below the safety sides in order to avoid collisions with the feet.

Stickers have been attached at the relevant positions to warn the user of these hazards. See A, for example.

Keep feet and limbs away from the above-mentioned danger areas when lowering the bed to its lowest position.

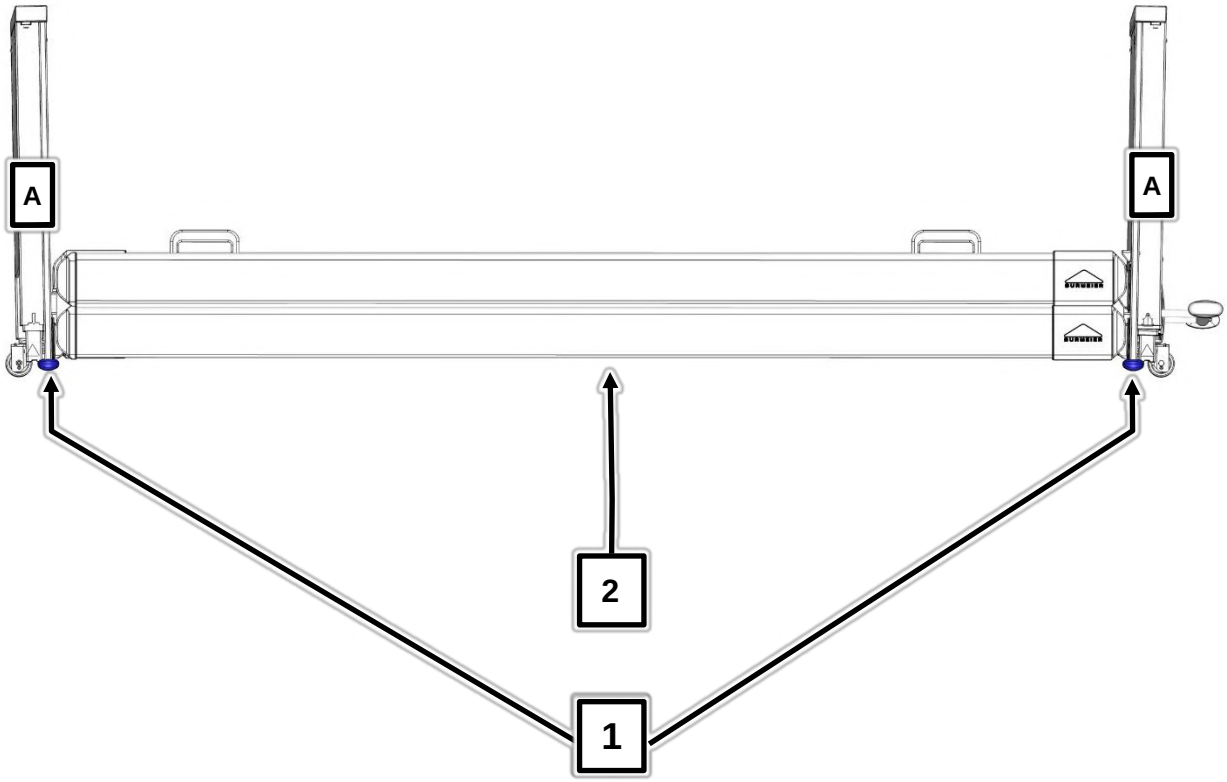

4.4.2 Handset

The electrical bed functions can be activated by the resident or the user by using the handset. For safety reasons, the handset is equipped with a locking function. Depending on the clinical condition of the patient, the user must lock handset adjustments when deemed necessary by the supervising doctor (→chapter 4.4.4).

- The electric motors operate only as long as the corresponding buttons are held pressed.
- Adjustments are possible in both directions.
- An elastic hook allows the handset to be hung at practically any position on the bed.
- The coiled cable provides ample flexibility and freedom of movement.
- The handset can be wiped clean.

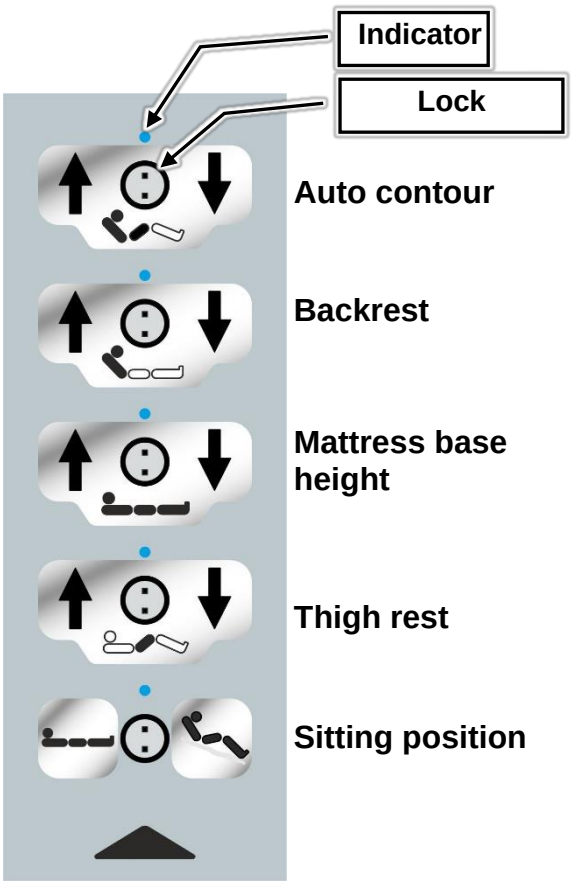

- The following basic rule applies to the buttons:

Raise

Lower

Only one button can be pressed at a time, otherwise all adjustments stop (emergency off safety function).

4.4.2.1 Adjustment functions of the handset

Auto contour

Raise: The backrest and thigh rest are raised at the same time.
Lower: The thigh rest follows the backrest after a five second delay.

- This prevents the resident from sliding towards the foot end of the bed.

Backrest
The backrest can be raised to approx. 70°.

- Please also refer to chapter → 4.3.2 “CPR release of the backrest”.

Height adjustment

Depending upon the bed model, the mattress base height can be adjusted from approximately 19.5 to 80 cm.
During the height adjustment, continuous monitoring of the horizontal position occurs – including when a strongly imbalanced load is acting on the mattress base.
During lowering of the bed, two intermediate stops occur automatically. To continue lowering, the adjustment button must be released briefly and then pressed again.

- **The first intermediate stop** takes place at approximately 40 cm, which is the most comfortable height for getting in and out of bed.
  Note: The bed also stops at approximately 40 cm when the bed is being raised.
  Only the height of the first intermediate stop can be individually programmed for each resident (see chapter 4.4.2.3).
- **The second intermediate stop** is at approximately 25 cm. From this stop onwards, the bed lowers at half speed and a warning tone sounds. The purpose of this feature is to reduce the risk of foot injuries for carers.

If the mattress base is tilted, it automatically moves into a horizontal position when it reaches the highest or lowest setting.

Thigh rest

The thigh rest can be raised to approximately 40°.

Sitting position

Initially, the backrest and thigh rest are raised (to an auto contour position). The mattress base is then tilted to a reverse-Trendelenburg position.

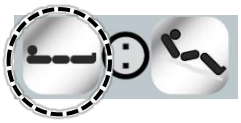

Sleep position

If this button is kept pressed, the mattress base is adjusted to the following positions in turn in the following order:

1. To a horizontal position
2. The backrest is lowered immediately – the thigh rest follows after a delay of 9 seconds
3. To the “intermediate stop” position (pre-set to approx. 40 cm).

4.4.2.2 Special functions

Switch the under bed light on/off * (optional equipment)

- Standard setting: the LED under bed light is active when connected to the mains power supply
- To switch the light on or off manually, press the “Sleep position” button and the “Sitting position” button at the same time and keep them pressed for approximately 1 second.
- For more details, see chapter 4.5.2.

4.4.2.3 Saving a new “intermediate stop” position

A new position can only be saved if the mattress base is in a horizontal position.

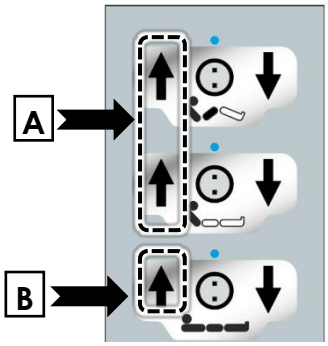

- Adjust the mattress base to the desired minimum height.
- On the handset, simultaneously press both A buttons briefly three times in a row
- Then immediately afterwards press button B

As soon as the new position has been saved, a short signal tone sounds to confirm the change.

4.4.2.4 Resetting the “intermediate stop” position to the factory default setting

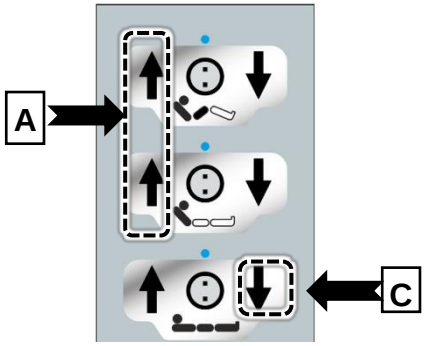

- On the handset, simultaneously press both A buttons briefly three times in a row
- Then immediately afterwards press button C for about 5 seconds until the pulsating signal tone stops.

4.4.3 Handset for Trendelenburg/reverse-Trendelenburg position (optional equipment)

The additional handset can be used for medical purposes when the bed is used for long-term care.

4.4.3.1 Adjustment functions

Pressing this button will move the mattress base into the reverse-Trendelenburg position.
If the bed is in a reverse-Trendelenburg position, this function will automatically cause the mattress base to move into a horizontal position when it is moved into its lowest or highest position.

Pressing this button will move the mattress base into the Trendelenburg position.
If the bed is in a Trendelenburg position, this function will automatically cause the mattress base to move into a horizontal position when it is moved into its lowest or highest position.

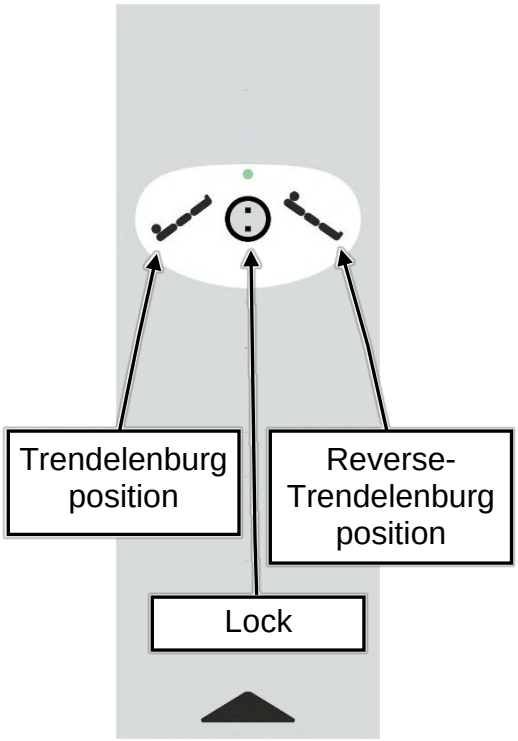

Danger

- Note that the Trendelenburg position is only to be used on the orders of a doctor or medical staff if the clinical condition of the patient makes this necessary.
- Setting the Trendelenburg position unintentionally or for no reason can endanger the resident.
- This position can only be set if the bed is connected to the mains power supply.

Only one button can be pressed at a time, otherwise all adjustments stop (emergency off safety function).

4.4.4 Handset locking functions

Danger

Only users are authorised to operate the locking function!

If the clinical condition of the resident is so critical that a particular adjustment using the handset places him/her at risk, then the user must lock this adjustment function immediately. The bed remains in the position it was in at the time it was switched off.

4.4.4.1 Locking functions of the handset

- Turn the respective lock on the handset clockwise to the locked position using the locking key. The colour of the respective display changes from green to yellow.

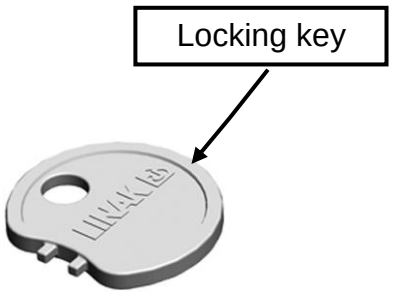

Do not forcibly turn the locking key beyond the stop! This could damage the lock and the handset.

Operation enabled:

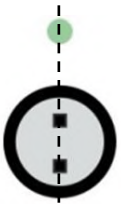

Lock in vertical position
Display colour: green → buttons can be operated (“clicking sound”)

Operation locked:

Lock position turned approx. 15° clockwise
Display colour: yellow → buttons locked

4.4.4.2 Locking functions for the Trendelenburg/reverse Trendelenburg handset

On this handset, there is a choice of 2 levels that can be set with the locking key as follows:

Symbol	Function/Explanation
	All adjustment options are locked
	All functions are activated

4.5 ATTACHMENTS AND OPTIONAL FEATURES

Optional bed features are indicated by an asterisk (*) .

4.5.1 LED reading lamp*

The bed can be fitted with reading lamp, if desired. The reading lamp can be supplied in two versions:

Version: Stella

Version: Sola

The reading lamp is supplied with power via a separate plug-in power adapter and has a stand with a flexible arm and swivelling lamp head.

Please refer to the separate instruction manual enclosed for operating instructions. For information on installation, please refer to the accessory instructions provided.

4.5.2 Under bed light*

The energy-saving, long-lasting LED under bed light provides safe orientation during the night and can reduce the risk of falls. The light is sufficiently subtle, however, to not disturb the resident of the adjacent bed.

Similar to illustration!

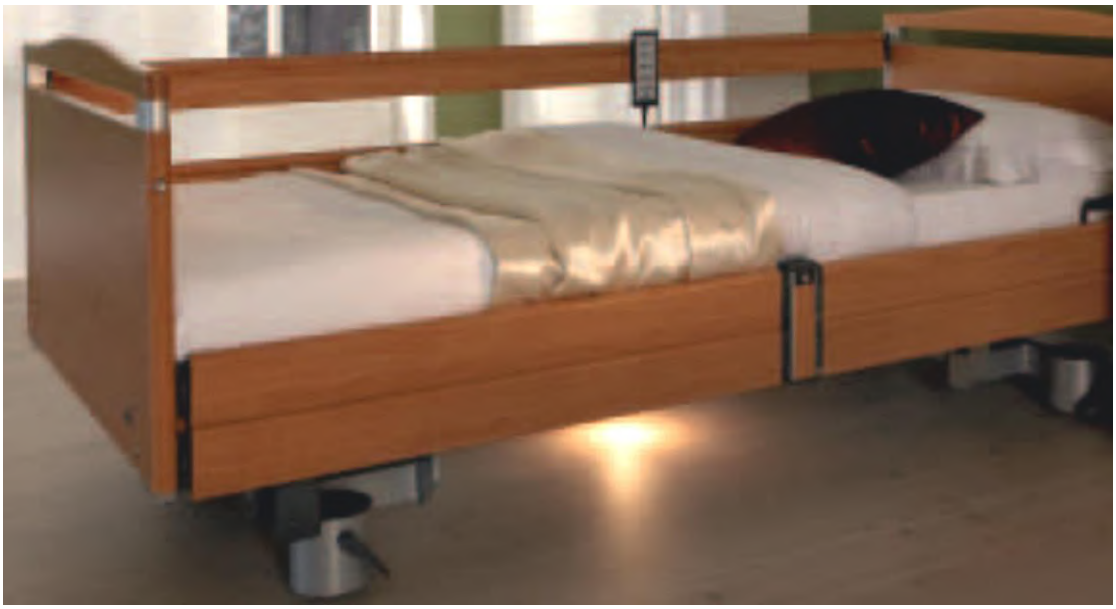

Switching the under bed light on/off

The light goes on automatically if the bed is connected to the mains power supply.

To switch the light on or off manually, press the *Sleep position* button and the *Sitting position* button at the same time and keep them pressed for approximately 1 second.

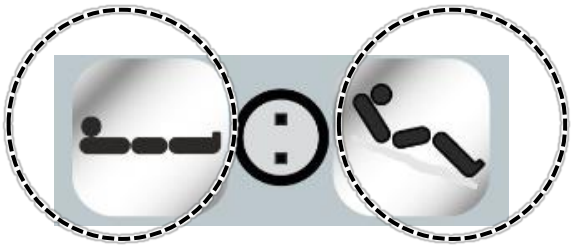

Please note: if the buttons are locked, then manual switching of the under bed light is also locked.

For information on installation, please refer to the accessory instructions provided.

4.5.3 Rechargeable battery*

Depending upon the model or features incorporated, a rechargeable battery can be used to operate the electrical drive system independently of the mains supply. This guarantees that all electric adjustments can be carried out even during a power cut.

Emergency operation

- When the bed is occupied by a resident of normal weight (around 80 kg), adjustments can be made for approximately 6 to 10 minutes if the battery is new and fully charged.
- Under emergency conditions, if the battery capacity is almost depleted, a signal tone will sound as a reminder during adjustments.

If the battery capacity is fully depleted, all adjustment functions are locked in order to prevent total discharge of the battery, as this could shorten the battery's life.

In this case, take the following action to optimise the battery life:

- Connect the bed to the mains power supply as soon as possible to recharge the battery.
- Avoid attempting repeated electric adjustments that would discharge the battery even more.

Charging the batteries (charging time)

- The batteries are fully charged automatically when the bed has been connected to the mains supply for at least 8-10 hours.
- It is impossible to overcharge the battery.
- During the charging process, the bed can be adjusted using the handset/control panel.
- The batteries have a limited service life. In normal use, their service life is up to five years. Batteries need to be replaced when operation cycles become very short. For safety reasons, at least one more height adjustment (UP + DOWN) should always be possible. Otherwise, the batteries must be replaced.
- In this case, contact Burmeier's customer service. We will replace the rechargeable batteries and dispose of the old batteries properly (see chapter 6.4 for the address).

For information on installation, please refer to the accessory instructions provided.

4.5.4 Patient lifting pole*

The two corners of the mattress base frame at the head end E of the bed are each fitted with a round sleeve A with a recess C at the top. These sleeves are the location sleeves for the patient lifting pole. The patient lifting pole should be fitted on the side of bed on which the resident will be getting in and out. It will help the patient or resident to get in and out of bed.

Danger

The maximum loading capacity at the front end of the patient lifting pole is 75 kg.

- Do not swing the patient lifting pole out beyond the boundaries of the mattress base or apply a load to it there. Otherwise the bed may tip up. It is essential that you pay attention to this when mobilising the resident or helping him/her into bed.
- The patient lifting pole is not suitable for rehabilitation exercises.

Warning

- Pay attention to door clearances when moving beds with inserted patient lifting poles.

To insert the pole

Insert the long, straight end of the patient lifting pole D into one of the two adapter sleeves. The metal pin B on the patient lifting pole must be located in the notch of the adapter sleeve. This restricts the slewing range of the patient lifting pole (see illustration below).
The patient lifting pole is now facing the centre of the bed and can swing to the side as far as the restriction allows.

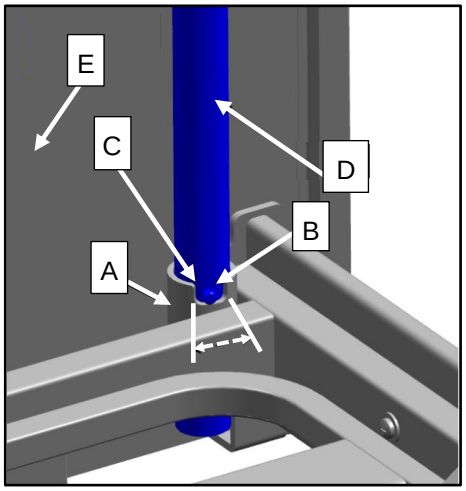

To remove the pole

Pull the patient lifting pole up and out of the adapter sleeve.

Slewing range of patient lifting pole

If the patient lifting pole swings outside the bed area and a weight is applied to it there, there is a danger that the bed will tip up due to the weight. Therefore, the metal pin on the patient lifting pole must always sit in the notch in the adapter sleeve!

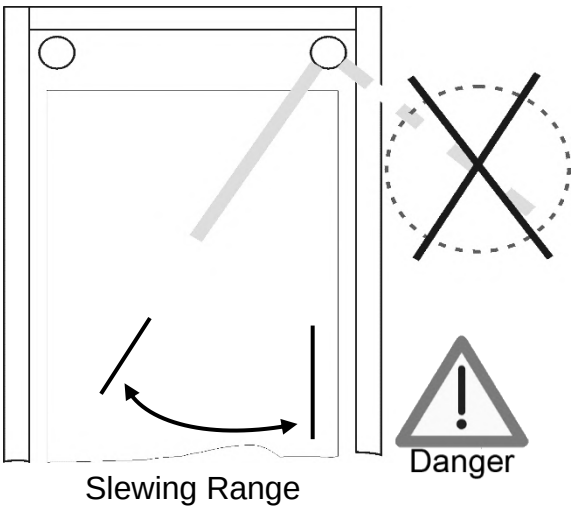

4.5.5 Grab handle* (triangular grab handle)

A triangular grab handle can be attached to the patient lifting pole (accessory, see chapter 8).

The resident can use this triangular grab handle to sit up and readjust his/her position more easily.

Danger

Check the grab handle and strap regularly for damage (see chapters 6.1 and 6.2).

Replace damaged grab handles or straps immediately.

Advice

Service life:

A date is printed on the grab handle. In normal use, the grab handle has a service life of at least five years. After this period, a visual and functional inspection must be carried out every six months to determine whether the handle may continue to be used.

Attachment

Slide the fixed loop of the grab handle over the first bolt on the patient lifting pole.

Check that the grab handle is securely attached by tugging hard on it.

The maximum loading capacity at the front end of the patient lifting pole is 75 kg.

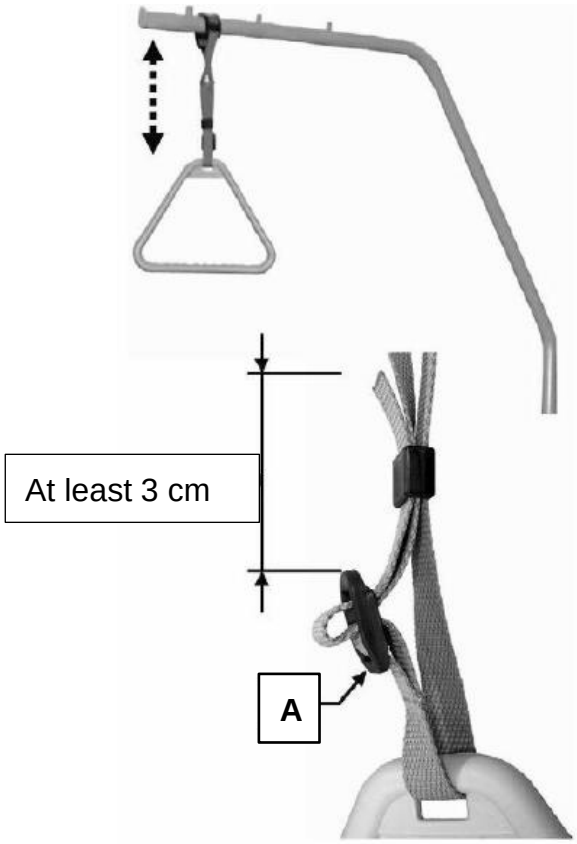

Height adjustment

The height of the triangular grab handle can be adjusted using the strap.

Make sure that the strap is correctly threaded through the buckle.

Make sure that the end of the strap projects at least 3 cm from the buckle A.

4.5.6 Integrated bed extension*

This bed is equipped with an integrated bed extension at the foot end of the bed. This makes it possible to extend the length of the mattress base by approximately 20 cm. The resulting gap is filled with a support base. The safety side bars must be replaced by longer ones. A support base and two short side panels must also be fitted.

The bed extension cannot be pulled out properly if someone is lying on the bed. To prevent the guides from jamming, therefore, the bed extension may only be pulled out if the bed is unoccupied.

4.5.6.1 Extending the bed

The bed must not be occupied.

1. For easier installation: raise the bed and apply the brakes.
2. Remove the bars of the safety sides, see chapter 4.7.
3. At the foot end, loosen the screws under the mattress base frame on either side (see next page 1) by a few turns (approximately 2 to 3 whole turns).

Attention: Do not completely remove the screws. These screws act as a limit stop for the foot-end chassis. They make it impossible for the chassis to be pulled completely out of the mattress base frame.

4. Release the brakes at the foot end.
6. Carefully pull the foot-end chassis out as far as the limit stop (approximately 20 cm).
7. Then tighten the two screws again from below.
8. Try sliding the foot-end chassis back and forth to check that it is securely fixed.

   Check to make sure that the chassis cannot be pulled further out.

7. Apply the brakes at the foot end.
8. Place the support base into the resulting space in the mattress base.
9. Secure the short side panels 2 and the support base from the inside using the two through bolts (M6x30 mm) and two washers (6.4 mm) (see next page).
10. Attach the longer safety side bars, see chapter 3.7.

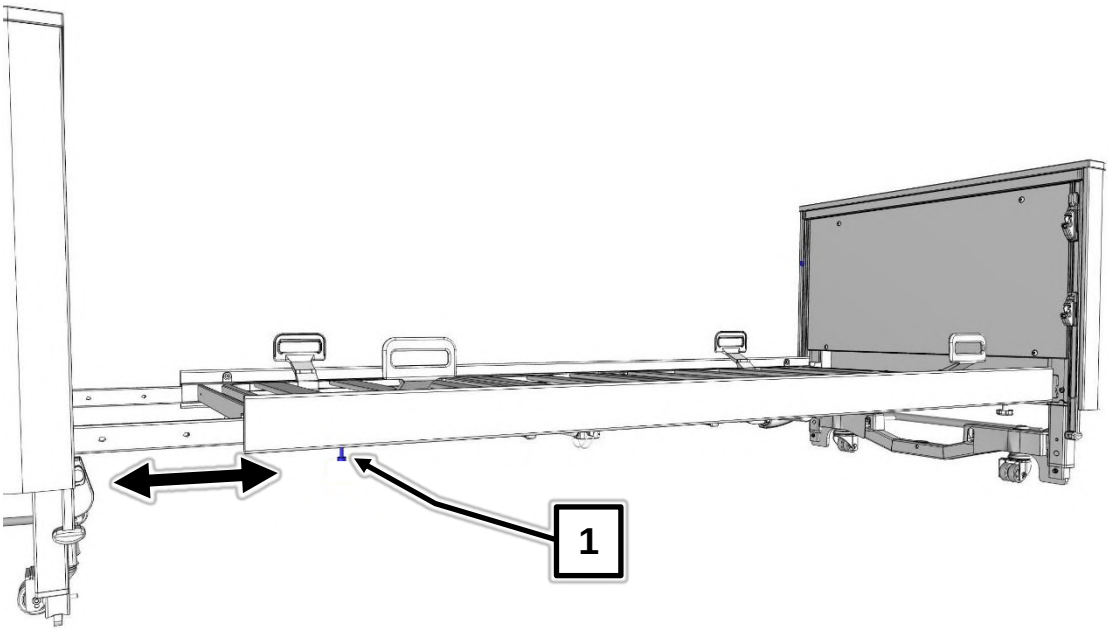

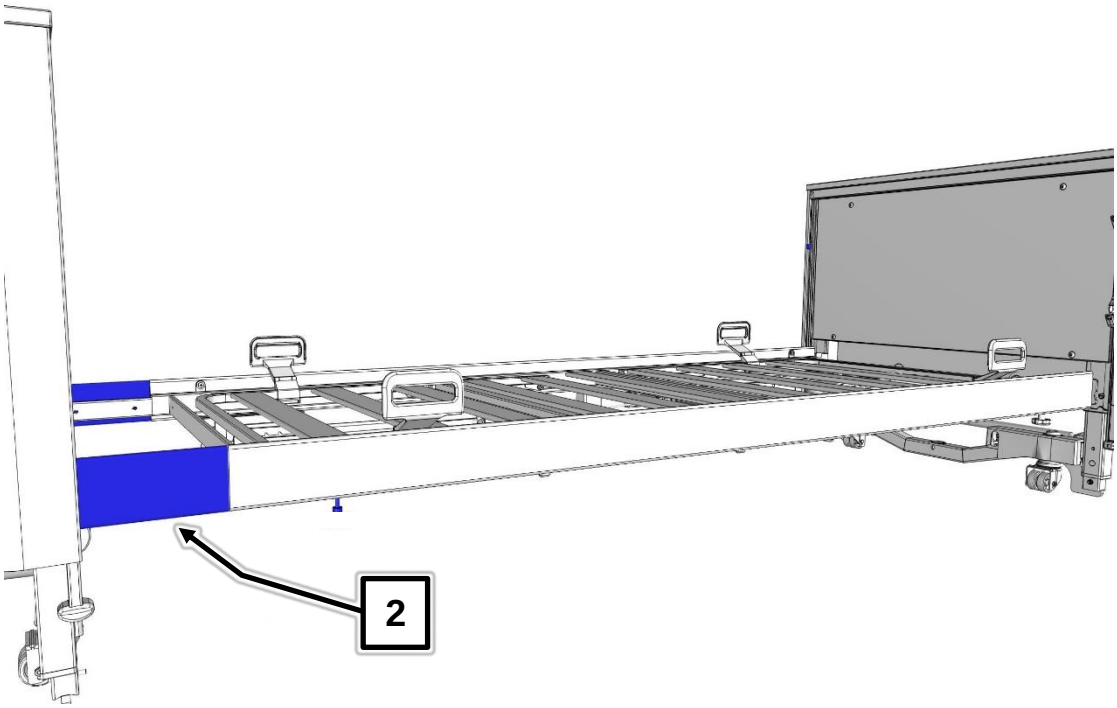

4.5.6.2 Shortening the bed

Proceed in reverse order to the attachment process.

4.6 OPERATING THE SAFETY SIDES

The bed has safety sides to protect the resident from falling out of bed. The bed is supplied as standard with full-length safety sides **(2)** on both sides of the bed.

The safety sides can be raised from the lowered position beside the mattress base to protect the resident.

There are two types of safety sides, depending on the type of mattress base:

Type of safety side	**Type of mattress base**	**Height of safety side**	**Max. mattress height**
2 bars, full-length safety sides **(2)**	Metal	41 cm	19 cm
	Comfort	37 cm	15 cm

4.6.1 Special safety information for safety sides

Safety sides protect the resident from unintentionally falling out of bed. They are not intended as a device to prevent the resident from intentionally leaving the bed.

If not used properly, there is a considerable danger for the resident, e.g. strangulation. Be sure to observe the following safety information:

- Only use technically perfect, undamaged safety sides which engage securely!
- Before using the safety sides, assess and take into consideration the clinical condition and particular physical build of the resident:
  - For example, if the resident is extremely confused or very restless, avoid using safety sides as much as possible and make use of alternative safety measures such as restraint sheets, posey belts etc.
  - For especially small, slim residents, additional protective measures for reducing the space between the bars on the safety sides may be necessary. In such cases, use safety side foam covers (accessory), for example, or posey belts. This is the only way to effectively guarantee the resident's safety and reduce the risk of the person becoming trapped or slipping through.
- Only use suitable mattresses (not too soft) complying with DIN 13014 with a volume weight of at least 38 kg/m³ and dimensions complying with the specifications in this instruction manual for the bed (in the chapter "Accessories") and the instruction manuals for any accessory safety sides, to prevent endangering residents through entrapment or suffocation.
- If thicker special mattresses, such as anti-decubitus mattresses, are used (for prevention or therapy), an effective safety side height of at least 22 mm above the non-occupied mattress must be ensured.
  If this requirement is not met, the operator is responsible for taking suitable additional or alternative measures, based on his own risk assessment in view of the clinical condition of the resident and in view of the characteristics of the special mattress. These could include additional safety systems for the resident, regular and more frequent monitoring of the resident or internal instructions for users, for example.

Danger

The resident's risk of falling is less severe:

- the smaller and more settled the resident is
- the softer the mattress is (the resident sinks deeper into the mattress)

- Lock the operating functions for the resident on the handset if the resident is exposed to an increased risk of entrapment during backrest and thigh rest adjustments when the safety sides are raised.

  Otherwise there is a danger of limbs being crushed or trapped by the safety sides if the resident inadvertently activates the handset. The effectiveness of the safety sides can also be reduced if any mattress base sections are raised to a high level.

Danger

Risk of injury if the mattress retainers are not used and a side panel is only fitted on one side

In this case, a mattress can be displaced too far away from a raised safety side and towards the side panel on the other side of the bed. The occupant could then fall into the space between the mattress and the safety side and could become trapped and/or suffocate.

- Only use mattresses with suitable dimensions, as described in the chapter entitled "Accessories"
- Always use the mattress retainers that are fitted to the bed 1, since the side panel itself does not fix the mattress in place.

Similar to illustration

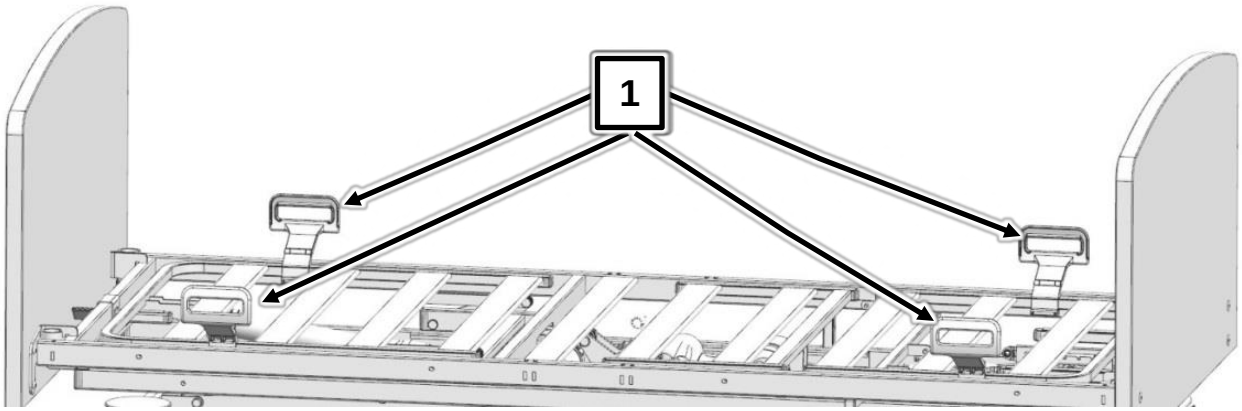

4.6.2 Raising the safety sides

1. Raise each of the safety side bars, one after the other, one end at a time, until they click audibly into the uppermost position at both ends.
2. Push and pull the bars to check that they have been locked in place by the release buttons.
3. Repeat the procedure for the safety side on the other side of the bed.

4.6.3 Lowering the safety sides

Risk of injury and crushing!

To avoid crushing and injuries when lowering the safety sides, observe the following instructions:

- Before lowering the safety side, make sure that the resident's limbs are not located within the area of movement of the bars.
- Do not allow the safety side bars to fall if the bed is at its lowest position (approximately 3 cm above the floor). Otherwise, feet located directly below the bars could be injured.

Similar to illustration

1. Raise the safety side bars slightly.

2. Press the release lever 1 downwards.

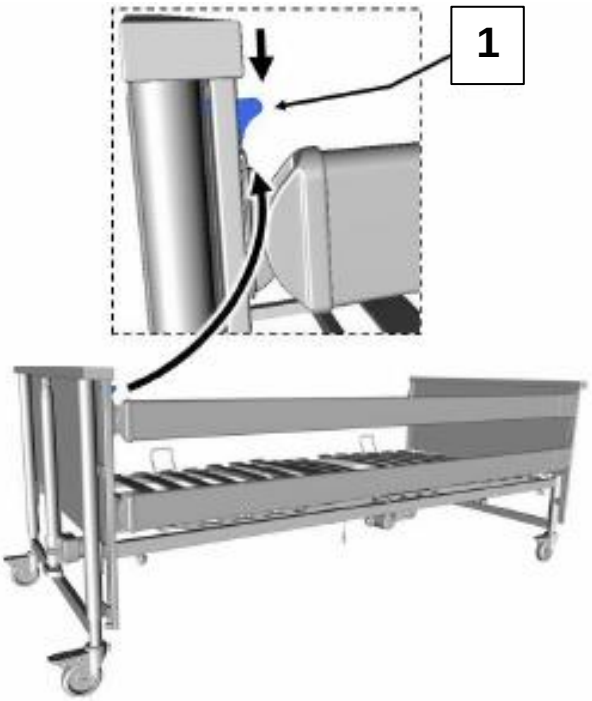

3. Lower the safety side bars slowly.

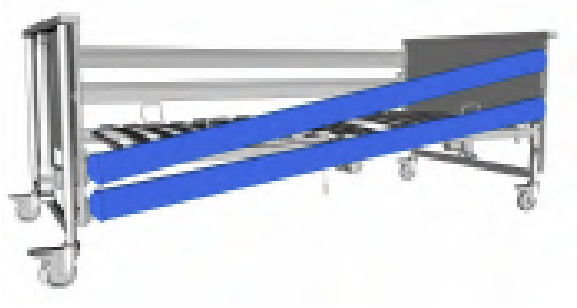

4. Repeat steps 2 and 3 at the other end of the bar.

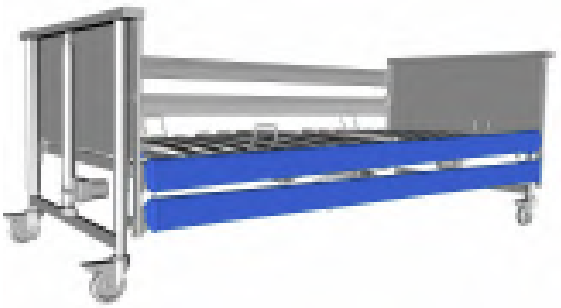

4.7 REMOVING/INSTALLING THE SAFETY SIDES

The removal/installation of the safety sides is necessary if the integrated bed extension (optional equipment) is to be pulled out.

To avoid any injuries, removal/installation work may be carried out only when the bed is unoccupied.

4.7.1 Removal

Similar to illustration!

1. Raise the bars.
2. Press the orange release button **1** in the safety side guide at the foot end downwards with your finger and lift out the top bar.
3. Repeat step 2 at the other end of the bar.
4. Repeat steps 2 and 3 for the bottom bar.

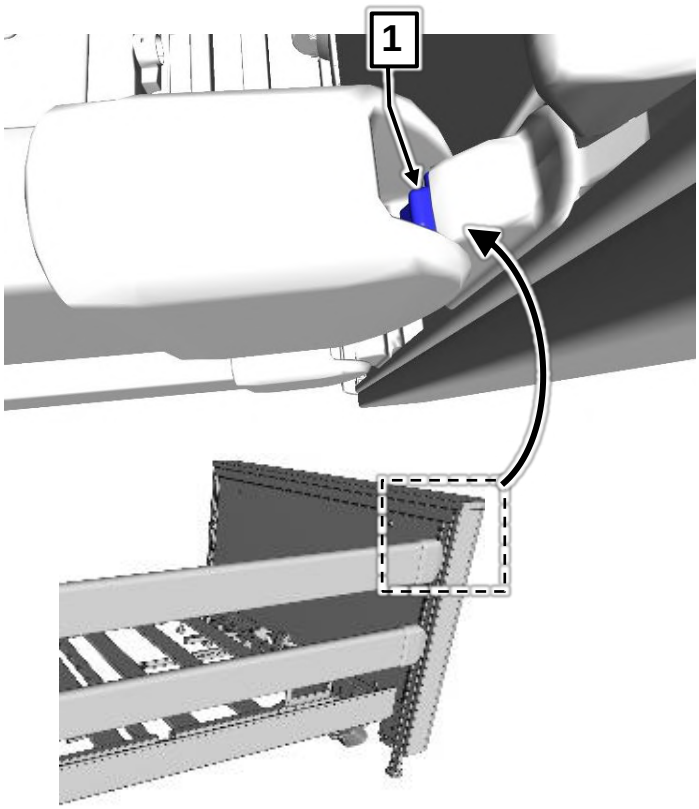

4.7.2 Installation

See chapter 3.7.

4.8 COMFORT MATTRESS BASE, 90 CM WIDE (OPTIONAL EQUIPMENT)

When ordered with a bed extension, 5 additional elements are supplied for the Comfort mattress base.

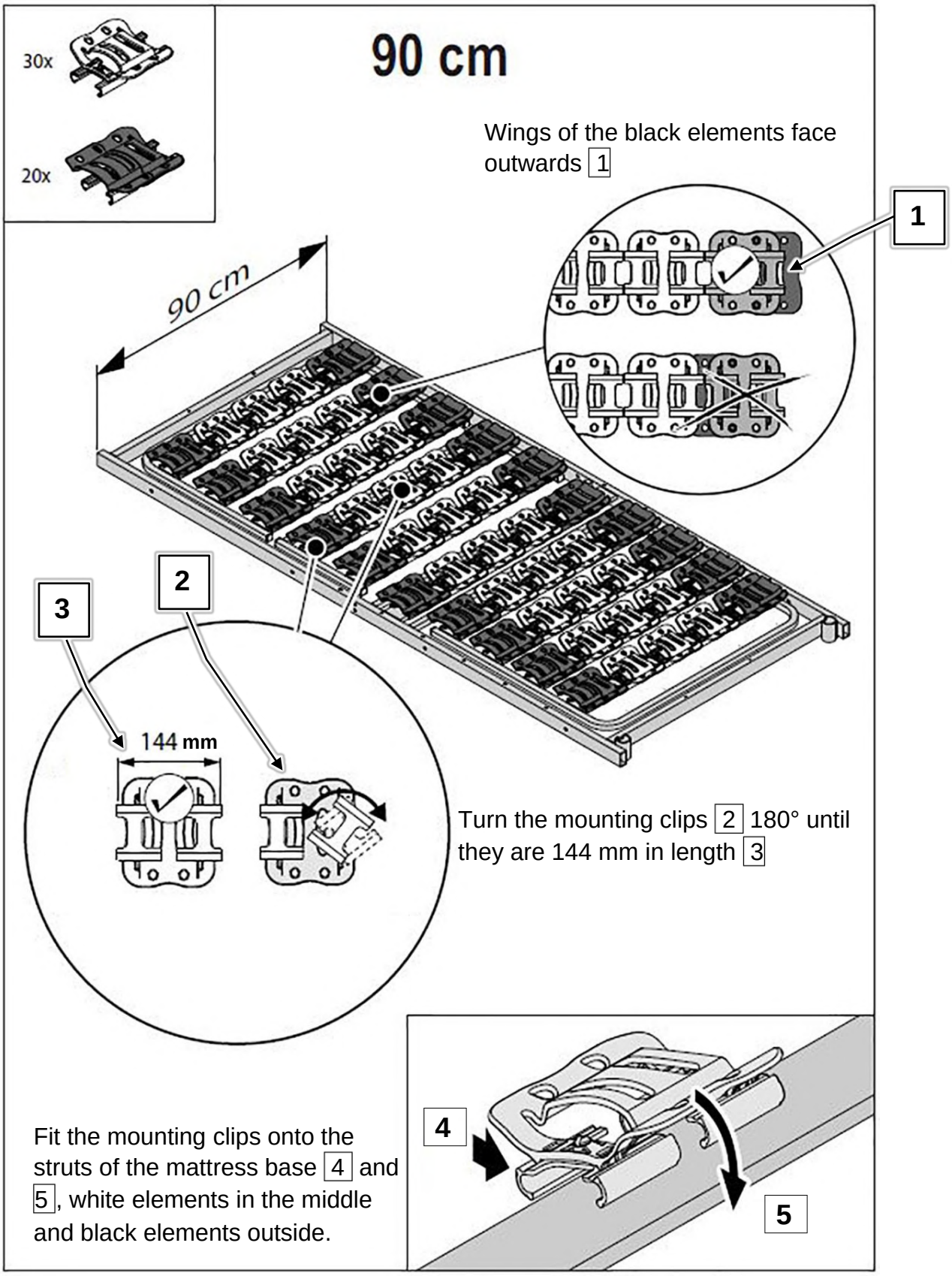

4.9 INSERTING THE MATTRESS

Place a suitable mattress on top of the mattress base. Please comply with the permissible dimensions and characteristics of the mattress (for mattress dimensions, see chapters 4.6 and 9.1).

Warning

Risk of injury

Failure to heed this warning may risk injury to residents from entrapment or suffocation between the displaced mattress and the raised safety sides.

- Only use mattresses with the specified dimensions and characteristics that are approved by the manufacturer for use with this bed.
- Always lay the mattress 1 between the 4 lateral mattress retainer bars 2 of the mattress base. This prevents the mattress from moving outwards at the sides of the bed.
- Please also note any other possible position markings on the mattress (such as “Oben/Top”, “Kopf/Head”).
- Always place the mattress onto the mattress base in the way described below.

Top view (shown schematically): Mattress base with properly inserted mattress

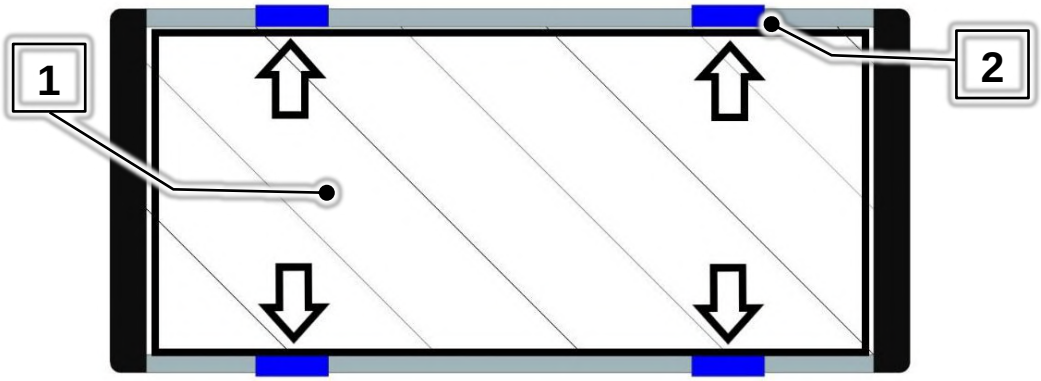

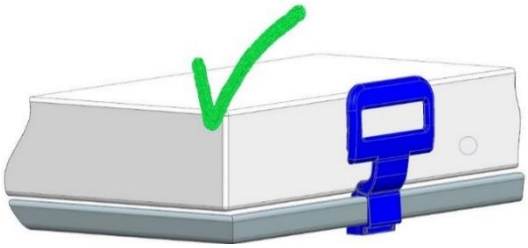

Detail (shown schematically): **CORRECT**: Mattress lies between the mattress retainer bars

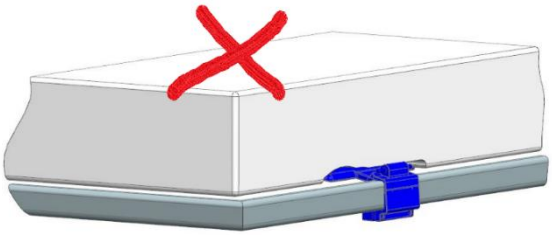

Detail (shown schematically): **INCORRECT**: Mattress lies outside/above the mattress retainer bars

Mattress retainer bars are supplied as fixed-position or fold down bars, depending on the features of the bed.

5 Cleaning and disinfection

This bed is not suitable for machine washing or for cleaning in a decontamination unit. The bed is only suitable for manual cleaning and disinfection. To extend the bed's service life and preserve its operability, always follow the instructions given in this chapter.

5.1 General information on cleaning and disinfection

Cleaning is the most important measure and requirement for ensuring successful chemical disinfection.
When the bed is occupied by the same resident, routine cleaning of the bed once every 14 days, or as required, is generally sufficient. Disinfection of the chassis is only necessary if it has been visibly contaminated with infectious or potentially infectious materials (blood, stool, pus etc.) or if the doctor requires this due to the presence of an infectious disease.

Before a new resident occupies the bed, the bed must first be cleaned and disinfected by wiping!

Warning

Before cleaning or disinfecting:

- Unplug the power adapter from the mains socket and store the adapter so that it does not come into contact with water or cleaning solutions.
- Ensure that none of the electrical components show any signs of external damage. Failure to comply with this may result in the ingress of water or detergents into the electronic equipment and cause malfunctions or damage.
- Before using the power adapter again, ensure that there is no residual moisture on the electrical contacts.
- The electrical components must not be cleaned with a water jet, a high pressure cleaner or other similar devices! Clean only with a moist cloth!
- If you suspect that water or any other form of moisture has penetrated the electrical components, unplug the power adapter immediately or, if already unplugged, do not plug it back into the mains socket. Label the bed clearly as “Out of Order” and take the bed out of service. Report this immediately to the operator responsible.

Failure to follow these safety instructions could result in considerable damage to the equipment and lead to subsequent malfunctions!

5.2 CLEANING AND DISINFECTION PLAN

- Remove the bed linen and have it laundered.
- Clean all surfaces, including the slatted frame and mattress base made of synthetic or metal sections, with a mild and environmentally friendly cleaning agent. This also applies for the handset.
- If the bed has been visibly contaminated , with infectious or potentially infectious materials, the bed should be subsequently disinfected by wiping with one of the disinfectants approved by the DGHM (Deutsche Gesellschaft für Hygiene und Mikrobiologie, German Society for Hygiene and Microbiology) and/or the VAH (Verbund der Angewandte Hygiene, Association for Applied Hygiene) which is suitable for the corresponding surfaces. The same applies for all beds with residents who have notifiable diseases according to §6 of the Infektionsschutzgesetz (IfSG, Protection against Infection Act), bacterial infections, or infections with multiple-resistant pathogens (e.g. MRSA, VRE), as well as all beds in intensive care stations and infectious disease clinics. For all disinfections, the concentrations given in the DGHM/VAH list must be observed.
- Disinfection of the castors is only necessary if they have been visibly contaminated with infectious or potentially infectious materials.

In some cases, the bed may need to be disinfected in the care or treatment room in order to prevent the spread of pathogens.

5.3 INSTRUCTING USERS AND STAFF

In order to ensure that cleaning and disinfection are conducted properly, we recommend that users and staff are appropriately instructed.

They should be instructed to observe the following points:

- A clean bed must be transported in such a way that it will not become dirty or contaminated during transport.
- Staff must be informed of the special measures required for cleaning and disinfection and should carry out the procedure in a reliable manner (the operator should specify the operational procedures and the individual procedural steps).
  Care must be taken that only disinfection agents approved by the DGHM or VAH (German Society for Hygiene and Microbiology) are used, and that these are used only in the approved concentrations.
  The disinfection agent must be suitable for use with the surfaces to be disinfected.
- For this activity, staff must be provided with (disposable) aprons and gloves which are impermeable to fluids.
- For cleaning, only fresh, clean cloths may be used which are subsequently laundered.
- When cleaning/disinfecting work has been completed, the staff must disinfect their hands before carrying out other tasks.
  Staff should be equipped with a suitable pump dispenser containing a disinfectant for hands.
- Cleaning the bed immediately at its usual location has the advantage that no “dirty” beds or bed components come into contact with clean beds. The transfer of potentially infectious germs that may be on the used bed frame is prevented in this way.
  A transfer of germs in terms of a nosocomial infection can be safely avoided by consistently and thoroughly following these recommendations.
- When the bed is not immediately reused, it should be stored (covered) in such a way that it is protected from dust, inadvertent soiling and contamination.

5.4 CLEANING AND DISINFECTION AGENTS

Pay attention to the following recommendations to ensure that the bed functions and usability are preserved as long as possible:

- Do not use scouring agents, stainless steel cleaning agents, abrasive cleaning agents or scouring pads.
  These substances can damage the surfaces.
- Cleaning and decontaminating agents must be used in the specified concentrations.
- We recommend (damp) wipe cleaning. When selecting cleaning agents, ensure that the agents chosen are mild (gentle to skin and surfaces) and environmentally friendly. A standard household cleaner can generally be used.
- Ensure that no liquid residues remain on any parts of the bed after cleaning or disinfection. Otherwise the surfaces in these areas may become damaged in the long term.
- If, despite its excellent mechanical resistance, the coated surface is damaged by scratches or marks that permeate the entire coating, the affected areas should be resealed using a suitable repair substance to prevent moisture from penetrating. For further information, consult STIEGELMEYER or a specialist dealer of your choice.
- Disinfectants based on compounds that could potentially release chlorine may be corrosive for metals, synthetics, rubbers and other materials over longer contact periods or when concentrations are too high. Use these agents sparingly and only if expressly required.

For disinfection by wiping, most cleaning and disinfection agents usually used in hospitals or care facilities can be used, such as cold and hot water, detergents, alkaline solutions and alcohols.

These agents must not contain any substances that could change the surface structure or the adhesive properties of the plastic materials.

The choice of cleaning agents and disinfectants available on the market may change from time to time. Burmeier therefore routinely tests the most commonly used materials for compatibility. The most up-to-date list of tested cleaning agents and disinfectants can be obtained on request.

Our customer service centre in Germany:

Burmeier GmbH & Co. KG
(A Stiegelmeyer-Group company)
Pivitsheider Strasse 270
32791 Lage/Lippe
Tel.: + 49 (0) 52 32 / 98 41- 0
Fax: + 49 (0) 52 32 / 98 41- 41
Email: info@burmeier.com
Internet: www.Burmeier.com

Customers outside Germany can contact our distribution companies in their particular country if they have any questions. Contact details can be found on our website.

5.5 HANDLING CLEANING AND DISINFECTION AGENTS

- Pay attention to the exact dosage! We recommend the use of automated dosing devices.
- Always prepare solutions with cold water in order to avoid the formation of vapours that are mucous membrane irritants.
- Wear gloves, in order to avoid direct skin contact.
- Do not keep ready prepared surface disinfection solutions in open containers with floating cleaning cloths. Be sure to close all containers!
- Use sealable bottles with pump dispensers for moistening the cleaning cloths.
- Ventilate the room after the disinfection has been completed.
- Disinfect by wiping; do not disinfect by spraying! When spraying, a large portion of the disinfection medium is released as a spray mist and could be inhaled.
- Furthermore, the wiping effect itself plays a significant role.
- Do not use alcohols for the disinfection of large surfaces.

6 Maintenance

Legal principles

Operators of medical beds in Europe are obliged, in accordance with the new Medical Device Regulation (EU) 2017/745 (MDR) and existing relevant national laws/regulations, e.g. in Germany currently the

- German Medical Devices Operator Ordinance § 4 (Maintenance)
- DGUV 3 (Testing of Mobile Electrical Equipment in Commercial Use) of the German Employers' Liability Insurance Association

to preserve the safe operating condition of medical devices throughout their entire service life. This also includes regularly carrying out expert maintenance and safety checks.

All 'serious incidents' [2]relating to the device must be reported to the manufacturer and the competent authority of the member state in which the user and/or resident is established (in Germany: www.BfArM.de)

In other countries outside Germany or the EU, the relevant national regulations must be complied with.

Information for operators

This bed has been designed and built to work safely over a long period of time if operated correctly and put to proper use. The expected service life is up to 8 years.

Warning	This bed must not be modified without authorisation by the manufacturer.
Danger	Frequently transporting, assembling and dismantling the bed, improper operation and long-term use may cause damage, defects and wear to the bed over time. These deficiencies can cause hazards if they are not recognised and corrected immediately.

For this reason, there are legal principles for conducting regular inspections in order to guarantee the safe condition of this medical product.

According to § 4 of the Medical Devices Operator Ordinance (Medizinprodukte-Betreiberverordnung), it is the responsibility of the operator to maintain this product. For this reason, the regular visual inspections and functional checks described hereafter must be performed by both the operator and the users. Only carry out maintenance work on unoccupied beds.

- Instruct users about the following inspections that are required to be performed! (See chapter 6.1).

[2] Incident that directly or indirectly had, could have had or might have one of the following consequences:
a) The death of a resident, user or other person
b) The temporary or permanent serious deterioration in the state of health of a resident, user or other person
c) A serious risk to public health
(source: MDR, Article 2(65)

6.1 BY THE USER

If damage or a malfunction is suspected, the bed must be withdrawn from service immediately and disconnected from the mains supply until the defective parts have been repaired or replaced!

Contact the operator responsible if the defective parts need to be replaced or repaired.

Besides the regular comprehensive inspections by qualified technical staff, the user (care staff, caregiving relatives etc.) must also carry out a minimum of visual inspections and functional checks at short, regular intervals and before use by a new occupant.

Recommendation: Inspect all electrical and mechanical components once a month. In addition to the above, check the power adapter, power cable and handset cable every time they have been subjected to mechanical stress and each time after the bed has been moved to a new location.

Checklist: Inspection by the user

Check What?	How?	OK	Not OK	Description of defect
Visual inspection of the electrical components				
Handset, handset cable	Damage, routing of cable			
Power adapter/mains cable	Damage, routing of cable			
Handset	Damage, foil			
Visual inspection of the mechanical components				
Patient lifting pole, adapter sleeves	Damage, deformation			
Chassis	Damage, deformation			
Wooden surround	Damage, splinters			
Mattress base frame	Damage, deformation			
Safety side bars	Damage, splinters			
Functional check of the electrical components				
Handset	Function test, locking function			
Functional check of the mechanical components				
Castors	Braking, moving			
Emergency release of the backrest	Test according to instruction manual			
Screws and bolts	Fixed securely			
Safety sides	Safe locking, unlocking			
Lower leg rest	Engages properly			
Motor bolt	Fixed securely			
Accessories (e.g. patient lifting pole, grab handle)	Fastening, damage			
Inspector's signature:	**Inspection result:**			**Date:**

6.2 BY THE OPERATOR

The operator of this care bed is obliged according to MPBetreibV (Medical Devices Operator Ordinance) Section 4 to conduct regular inspections after each renewed assembly, after each maintenance and during regular operation to ensure the safe condition of the care bed!

These inspections must be repeated within the regular maintenance activities depending on the conditions of use according to the MPBetreibV (Medical Devices Operator Ordinance) § 4 and the inspections prescribed by the Employers' Liability Insurance Associations for mobile electrical equipment in commercial use according to DGUV A3 (Testing of Mobile Electrical Equipment in Commercial Use).

Inspection interval

We recommend, as a guideline, that an annual DGUV 3 inspection be carried out by our qualified service engineers, with verification of adherence to the 2% error rate (see also the DGUV 3 accident prevention regulations: § 5, Table 1B).
Conduct the inspection in the following order according to DIN EN 62353 (VDE 0751):

I. Visual inspection
II. Electrical measurement
III. Functional check

Visual and functional check

- The visual inspection and function testing as well as the assessment and documentation of the test results must be conducted exclusively by competent persons, according to MPBetreibV Section 4 and DIN EN 62353 (VDE 0751), who have the required qualifications and tools for proper inspections and testing.

Electrical measurement

- The electrical measurement must be carried out with suitable measuring instruments in accordance with DIN EN 62353 with an automated measuring procedure. In this case, this measurement may also be performed by a person trained in electrical engineering (as defined by DGUV 3) with additional medical and device-specific knowledge.

  The test results must be evaluated and documented only by a qualified electrician with additional medical and device-specific expertise.

- We recommend an annual visual inspection and functional check. If this test has been passed, an electrical measurement every ten years is sufficient if the bed is equipped with an external power adapter.

The following describes the procedure for leakage current testing:

Test cycles (230-volt system with mains cable)

Visual inspection, electrical measurement and functional check:	Annually* and before putting the bed into service for the first time

Test cycles (24-volt system with power adapter)

Visual and functional check:	Annually* and before putting the bed into service for the first time
Electrical measurement:	Every ten years, if the annual visual and functional inspection was passed

*: We recommend the inspection cycles indicated. In the case of verifiable compliance with the 2 % error rate (also see DGUV 3: §5, Table 1B), the inspection cycle can be extended to a maximum of 2 years on the operator's own responsibility.

Operating current test procedure

Preparation:
- Unplug the power adapter from the mains socket.
- Plug the power adapter into the test socket on the test device.

- Test procedure:
  - Make the following selections on the instrument: Leakage current test: direct or differential current in accordance with DIN EN 62353
  - Perform a leakage current test in accordance with the instructions provided by the test device manufacturer.
- Limit value:
  - Leakage current $I_{AB} < 0.1$ mA.

- If damage or a malfunction is suspected, the bed must be withdrawn from service immediately and disconnected from the mains supply until the defective parts have been repaired or replaced!

Please use the inspection report templates included below for your inspections.

Inspection Report following an Inspection of Electromedical Equipment according to DIN EN 62353 (VDE 0751-1): 2015-10 – Page 1 of 3

Customer / Medical facility / Practice:				
Address:				
Carried out: ☐ Repeat inspection ☐ Inspection prior to initial operation (reference value)				
☐ _____ ☐ Inspection following repair/servicing				
Equipment type: ☐ Hospital bed ☒ Care bed		**Protection class:** ☐ I ☒ II		
Bed type: *Lenus*		**Inventory number:**		
Location:				
Transformer unit number:		**Serial number:**		
Manufacturer: *Burmeier & Co. KG*		**User-specific parts:** *Mattress base, headboard and footboard, safety sides*		
Testing equipment used (type/inventory no.):		1.		
Medical Devices Regulation classification: *Class I*		2.		
I. Visual inspection **What?**	**How?**	**OK**	**Not OK**	**Description of defect**
Visual inspection of the electrical components				
Stickers and type plates	Present, legible			
Control unit housing, external plug-in power adapter (optional equipment)	Correct position, damage, signs of spilt liquids/contamination that may affect the insulation			
Housing and motor lifting tubes				
Handset housing and keypad film				
Motor cable, handset cable, mains cable, connection cable	Damage, routing of cable			
Plug and plug cover on control unit	Present, securely fixed			
Visual inspection of the mechanical components				
Stickers and type plates	Present, legible			
Patient lifting pole, adapter sleeves; grab handles	Damage, deformation			
Chassis	Damage, deformation			
Bowden cable, CPR release, backrest	Routing, kinks			
Castors	Damage			
Mattress base	Damage, deformation			
Wooden surround	Damage, splinters			
Welded seams	Split welded seams			
Safety sides: Bars	Damage, splinters, dimensions acc. to Sheet 3			
Locking levers of safety sides, side panels, headboard/footboard	Secure position of locking levers			
Connecting elements (screws, bolts, nuts, safety caps)	Secure fixing, missing parts			
Wearing parts, such as joints	Damage			
II. Electrical Measurement (use only measuring instruments according to DIN EN 62353 (VDE 0751-1)) Note: To minimise measuring errors, route the test leads as far away as possible from and not parallel to the power cables and handset leads of the bed. Also observe the operating instructions for the measuring instruments used.				
Insulation resistance (to be carried out only if there are doubts about the electrical insulation, such as:				
If the customer's RCD (residual current circuit breaker) has tripped several times				

If defective electrical housings are found and at the same time there are signs of spilled liquids/contamination that could affect the insulation					
1. Plug the mains cable/power adapter plug into the test socket of the measuring instrument. 2. Connect the probe at the common measuring point of all user-specific parts: = bare screw of the backrest swivel joint underneath the backrest on the mattress base frame 3. Start the measuring procedure on the measuring instrument; measuring voltage = 500 V DC					
	Limit value	Measured value			
Result: Bed prot. class II (type BF)	≥ 70 MΩ	MΩ			
Leakage current (direct or differential current measurement) 1. Plug the mains cable/power adapter plug into the test socket of the measuring instrument. 2. Connect the probe at the common measuring point of all user-specific parts: = bare screw of the backrest swivel joint underneath the backrest on the mattress base frame 3. Operate the motors using the handset for the duration of the measurement 4. Start the measurement procedure on the measuring instrument					
	Limit value	Measured value			
Result: Bed prot. class II (type BF)	0.1 mA	mA			
- In case of measured voltage external conductor - earth		volt			

Inspection Report following an Inspection of Electromedical Equipment according to D IN EN 62353 (VDE 0751-1): 2015-10 – Page 2 of 3

III. Functional test **What?**	**How?**	**OK**	**Not OK**	**Description of defect**
Functional check of the electrical components				
End of travel cut-out of the motors	Automatic cut-out			
Handset, control units, external power adapter	Test according to instruction manual: Locking functions; button function; no “rattling” when shaken			
Motors	No abnormal noise development (rattling, uneven running etc.)			
Installation of cable harness and fixing of plugs and strain relief	Secure attachment, firm fixing acc. to operating instructions			
Functional check of the mechanical components				
Joints and pivots;	Smooth operation			
Castors	Braking, secure engaging of brakes			
Safety sides	Secure engagement, unlocking acc. to operating instructions			
Lower leg rest	Engages properly			
Accessories (e.g. patient lifting pole, grab handle)	Secure attachment, without damage, suitability for bed			

Inspection result:

Inspection passed; test approval sticker applied:

☐ No safety-related or functional defects were detected

☐ No direct risk; the defects detected can be rectified quickly

Inspection was not passed; <u>no</u> test approval sticker applied:

☐ Appliance must be taken out of circulation until the defects have been rectified!

☐ Device does not meet requirements – modification / replacement of components / decommissioning is recommended!

Next inspection date:

Documents that form part of this inspection report:

☐ Enclosure, page 3/3: Dimensional check of safety sides in compliance with statutory regulations

☐ _____

Inspected on:	**Inspected by:**	**Signature:**
Evaluated on:	**Operator/Expert:**	**Signature:**

6.3 REPLACEMENT PARTS / TYPE PLATE

In order to maintain operational safety and the right to claim under warranty, only original Burmeier replacement parts may be used!

For quick and easy ordering of replacement parts, we require the item number, order number and serial number. You will find the necessary details by referring to the type plate and the PID number, which is located on the mattress base frame at the head end.

6.3.1 Type plate

Type plate, example

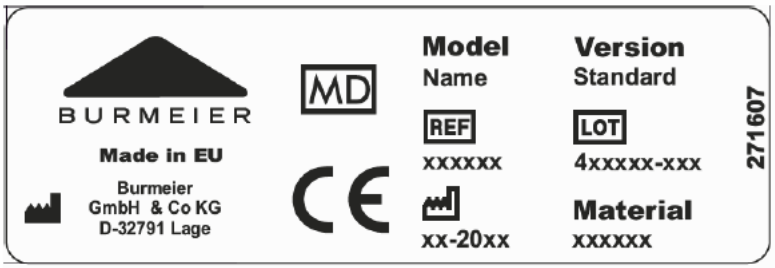

Required information:

Model	Name of product	**Version**	Version name
REF	Item number	LOT	Order number
	Date of manufacture (week/year)	**Material**	Material variant

6.3.2 PID bar code

The additional PID bar code on the bed includes a number that clearly identifies each particular bed.

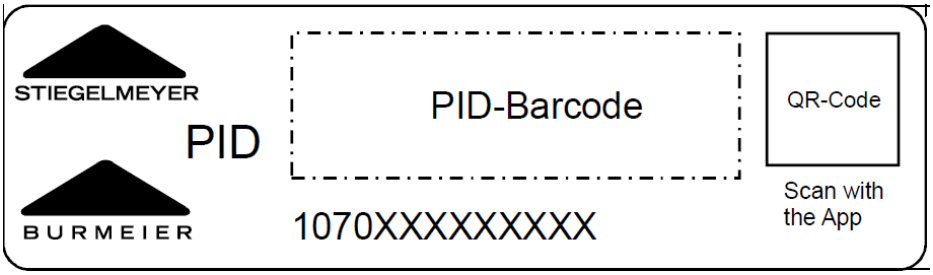

PID bar code, example

Also attached to the bed is a type plate with electrical data (see chapter 9.5.1).

6.4 SERVICE ADDRESS

To order replacement parts in Germany, and for any servicing requirements or other questions, please contact our customer service centre:

Burmeier GmbH & Co. KG
(A Stiegelmeyer-Group company)
Pivitsheider Strasse 270
32791 Lage/Lippe
Tel.: + 49 (0) 52 32 / 98 41- 0
Fax: + 49 (0) 52 32 / 98 41- 41
Email: info@burmeier.com
Internet: www.Burmeier.com

Customers outside Germany can contact our distribution companies in their particular country if they have any questions. Contact details can be found on our website.

6.5 REPLACEMENT OF ELECTRICAL COMPONENTS

Danger of death due to electric shock!

- Before commencing any work, unplug the power adapter from the mains socket!
- Any work and/or repairs to the electrical equipment may be carried out only by Burmeier's customer service, the drive manufacturer or qualified and authorised electricians in compliance with all the relevant VDE and safety regulations!

- The bed must be in the home position (with the mattress base horizontal) in order to remove the control unit and the electric drives. Otherwise, there is a danger of crushing due to mattress base sections falling.
- On no account should the user attempt to rectify malfunctions in the electrical system!

- When replacing individual components, make sure that the plugs have undamaged O-rings and are inserted into the control unit as far as they will go.
- The yellow sealing ring on the plug must be fully encompassed by the plug coupling.
- Attention! Do not use force. If it is not possible to insert the plugs, turn these around through 180° and insert them again.
- This is the only way to ensure a proper seal and faultless operation.

- All drive components are maintenance-free and must not be opened. In the event of a malfunction, the corresponding components should always be replaced in full!
- When replacing individual components, always make sure that all plugs are equipped with undamaged O-rings. Plugs must be aligned with the sockets on the control unit and must be inserted properly. Finally, the plug cover has to be properly fastened again. This is the only way to ensure a proper seal and faultless operation.

6.5.1 Plug assignment on the control unit

All plugs are connected to the control unit. To prevent the plugs from being inadvertently disconnected, they are secured with a plug cover. Before replacing a plug, lift this cover carefully using a screwdriver.

Assignment of the "HB" socket:

Depending on the existing additional electrical equipment, the following items can be connected here:

- Handset only; handset with under bed light (UBL)
- Via junction box MJB2: additional handset for setting Trendelenburg/reverse-Trendelenburg position
- Via junction box MJB8 L: Reading lamp**;** additional handset for setting Trendelenburg/reverse-Trendelenburg position
  Please note: Plug the reading lamp only into the socket marked →

Additional components mentioned above can be connected to any socket.

1 = Backrest motor
2 = Head section height motor
3 = Thigh rest motor
4 = Foot section height motor
HB = OpenBus® input:
Handset, various/ additional component junction box

Input = 24V cable connection from external power adapter, fixed, or 230V mains cable, detachable

: Standard

: Optional equipment

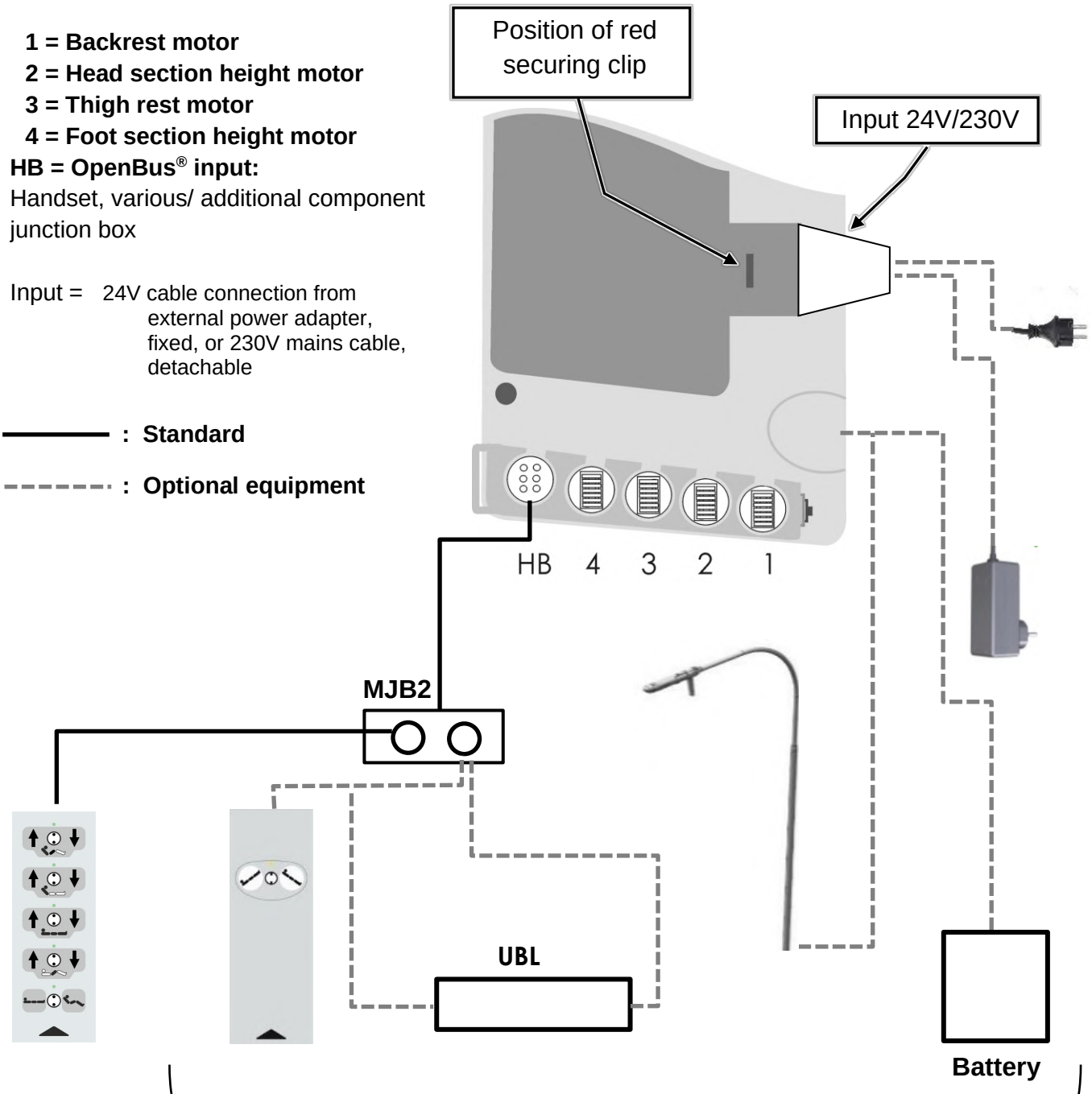

6.5.2 Replacing the handset

- If possible, raise the mattress base to the maximum height, for ease of access.
- Unplug the power adapter from the mains socket.
- Track the handset cable to the connecting point on the MJB2 junction box:

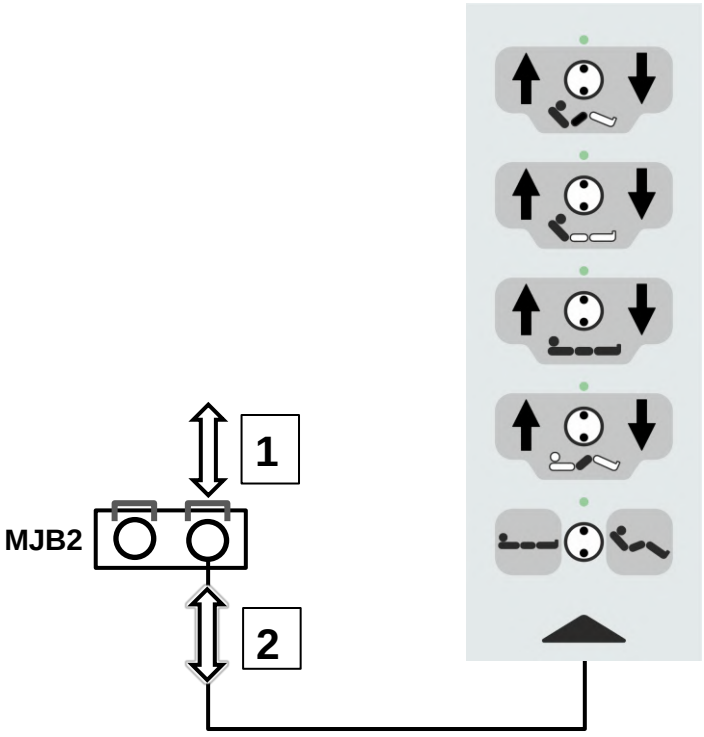

- Using a flat-blade screwdriver, carefully pull the securing clip 1 out slightly until it engages in position.
- Unplug the handset 2 and plug in a new handset with the plug groove aligned with the socket.
  Make sure that the O-ring on the plug is not damaged. It seals the plug into the control unit.
- Press the securing clip 1 in again.
- To complete the process, check that all the electrical bed adjustments function properly, in accordance with chapter 4.4!

6.5.3 Replacing the control unit

- Unplug the power adapter from the mains socket.
- Release the catches of the plug cover (on both sides).
- Mark the plug positions to avoid switching them when they are re-connected (see chapter 6.5.1).
- Unplug all plugs/connecting cables from the control unit.
- Remove the old control unit from its holder.
  - To do this, undo the screw and nut.
  - Pull the control unit towards the centre of the bed and out of the holder.
- Place the new control unit in position and secure it with the screw and nut.
  - Plug all the plug connections back into the corresponding sockets (see chapter 6.5.1).
  - Make sure that the O-rings on the plugs are present and undamaged. These seal the plugs into the control unit.
- When routing the handset cable, ensure that it cannot be damaged by any moving parts of the bed.
- Put the plug cover back in place. This prevents all the plugs from being pulled out of the control unit.
- Move the bed completely up or down. This enables the control system to detect the intermediate stops of the bed.
- Perform an initialisation of the control unit in accordance with chapter 6.5.4.
- To complete the process, check that all the electrical bed adjustments function properly, in accordance with chapter 6.2!

6.5.4 Initialising the control unit

The initialisation process involves carrying out a reference run, during which the current positions of the drives are communicated to the control unit. This ensures that the regulation of parallel running and the adjustment stroke restrictions work accurately.

When is this necessary?

- Before putting the bed into service for the first time
- After replacing the control unit or one or both of the mattress base height adjustment motors
- If height adjustment of the mattress base is not possible or only possible to a limited extent
- If height adjustment of the mattress base is not possible or only possible to a limited extent
  - When initialising the control unit, it is important that none of the functions are locked on the handset!
  - Any restrictions on lowering the mattress base height which have been saved will be lost.

- There must be no pauses longer than 6 seconds between the steps without pressing a key. The system will otherwise revert to the normal operating mode without completing the initialisation.

How should this be done?

Step	Buttons	Action
1	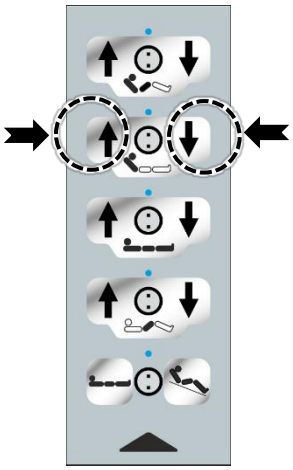	Press and hold both of the marked keys simultaneously (a rapid intermittent signal sounds) until after approximately 5 seconds a slow intermittent signal sounds (=RESET/ manual mode) When the lift motors are at their end position (top/bottom), the initialisation is complete. Otherwise, follow step 2 below.
2	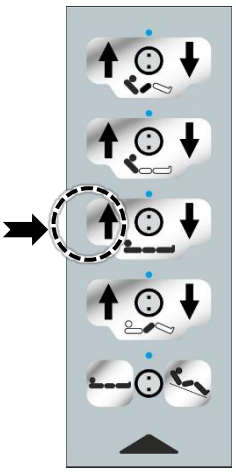	Raise the mattress base height with the “Height UP” button to the highest horizontal position until both motors switch off automatically at the highest position, and keep the button pressed for a further 2 seconds. When the button is released, the intermittent sound signal stops.

------- End of initialisation ----------

If no adjustments are possible and intermittent sound signals sound instead, this means that the control unit has detected a fault and is locked.

- **In this case only, carry out the following:**
  “RESET the control unit” (see chapter 6.5.5)

6.5.5 RESET the control unit

To be carried out in the following situations:

- If a serious error was detected by the control unit and this has now been properly rectified but the control unit has locked out the affected functions for safety reasons.
  Locking can be caused, for example, by:
  - A fault in the handset (e.g. a short-circuit/interruption in the cable; a jammed button)
  - A fault in the adjustment motors (e.g. a short-circuit/interruption in the cable, or a fault in the position detection/in the end position switch)
  - An internal fault in the control unit

- If the module emits intermittent sound signals when making motorised adjustments, and/or no adjustments are possible or adjustments are only possible on one side.

Effect:

- Deletes any existing saved errors (RESET). The last error is retained and can still be read out.

How to reset the control unit

Press and hold both of the marked keys simultaneously (a continuous signal sounds) until after approximately 5 seconds an intermittent signal sounds (=RESET/ manual mode)

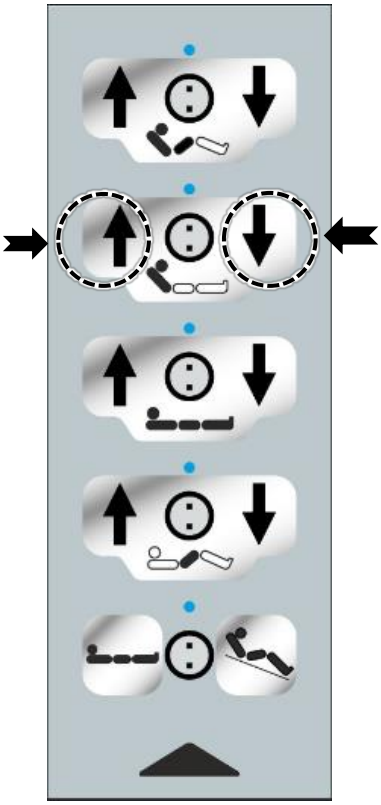

6.5.6 Replacing the motors

Please note: The following procedure applies only to the replacement of the backrest motor and thigh rest motor. Replacing the lift motors is more complex and requires expert knowledge.
In this case, contact Burmeier's customer service. We will replace the motors and dispose of the old motors properly (see chapter 6.4 for the address).

Proceed as follows:

1st Unplug the power adapter from the mains socket.

2nd Remove the faulty motor.

Attention: Raised rests could drop down when the motor is being removed. Hold the rests securely when you remove the motor.

3rd Unplug the plug-in cable connection on the motor.

4th Fit the new motor in exactly the same way. **Attention**: Secure the motor in place using the motor bolt.

5th After this, check the electrical bed adjustment functions (see chapter 6.2).

6.5.7 Decommissioning

If the bed is not used for an extended period, please follow the instructions below for taking the bed out of service safely and ensuring ideal conditions for its re-use:

1. Clean and disinfect the bed see chapter 5) and cover it to protect it against new contamination.
2. Adjust the mattress base to a flat home position at its lowest level.
3. Lock the electric adjustment functions to prevent them from being activated accidentally or by unauthorised persons (see chapter 4.4.4).
4. Engage the brakes on the bed.
5. Pay attention to the ambient conditions required for storage (see chapter 9.4).

7 Troubleshooting

The following table provides a guide for rectifying common malfunctions. Should a malfunction occur that is not included in the table, inform your operator.

Problem	Possible causes	Solution
Handset/ drive system not functioning (bed is connected to the mains power supply)	• The power adapter is not plugged in or not plugged in correctly No power supply to mains socket • Functions are locked on handset • Handset, power adapter or control unit is defective • Serious error/motor fault has occurred	• Plug in the power adapter; green LED on the power adapter must light up • Check the mains socket and fuse box • Unlock the functions (see chapter 4.4.4) • Inform your operator to arrange for the necessary repairs • Perform RESET; see chapter 6.5.5 / replace motor
Green LED on external power adapter* does not light up and drive system does not work	• The power adapter is not inserted properly • No power supply to mains socket • The power adapter is faulty/not inserted properly	• Plug in the power adapter Check the mains socket • Replace the power adapter with a new one; inform your operator to arrange for the necessary repairs
If an external power adapter* is used: Drives stop suddenly after lengthy period of adjustment	Thermal switch in power adapter* was triggered by overload	Do not make continuous bed adjustments for more than 2 minutes! After 2 minutes of continuous operation, a break of at least 18 minutes must be observed <u>To reset the power adapter after an overload:</u> Disconnect the device from the power supply and let it cool down for at least 30 minutes. Then reconnect the device to the power supply. If the device still does not function: Device is faulty – replace the device
Yellow LED does not light up when pressing the button on the handset/lights up green constantly	• Functions are locked on handset Handset faulty • The cable from the power adapter (24 volt) is not plugged in properly	• Replace handset • Check plug connections • Unlock the adjustment functions (see chapter 4.4.4)
Handset not functioning, adjustments are not locked	• Handset faulty • The control unit has detected a fault and for safety reasons has locked the adjustment functions	• Replace handset. • Perform RESET; see chapter 6.5.5; If it occurs again: Have drive system checked. Inform your operator to arrange for the necessary repairs

Problem	Possible causes	Solution
Operation is not possible despite functioning power supply	• Control unit has shut down due to overheating • The control unit has detected a fault and for safety reasons has locked the adjustment functions • Control unit defective	• Observe max. duty cycle: After 2 min ON, 18 min OFF; replace the control unit. • Perform reset, see chapter 6.5.5. • Replace control unit. Inform your operator to arrange for the necessary repairs
Drive runs for a brief time only, then stops	• Drive overloaded • Structural obstructions in the way of bed adjustment	• Remove the overload in the bed, retest • Remove obstructions; move bed away from obstructions (e.g. windowsills, sloping roofs)
Control unit partly not functioning;	• One or more motors are not connected properly/ electrical plug connections have come loose • There is a serious problem with the control unit. For safety reasons, all functions are locked.	• Check electrical connection of all motors/plug connections; • Perform RESET (see chapter 6.5.5); if it occurs again: Have drive system checked. Inform your operator to arrange for the necessary repairs
Height adjustments and tilting not possible or only in one direction; signal tone sounds during adjustment	• Control unit has “forgotten” the drive positions	• Perform initialisation; see chapter 6.5.4.
Pulsating beeping sound when button pressed when bed connected to power supply	• Motor fault • Handset fault	• Replace the motor • Replace handset with a new one

8 Accessories

A wide range of accessories is available for this bed, and we are continually extending this range.

Risk of injury

- Efficient and safe operation combined with maximum protection of residents can only be guaranteed if original Burmeier accessories are used that are designed for the relevant model of bed.
- In addition to the information given in this instruction manual, please also refer in this respect to the separate special instruction manuals supplied with certain accessories
- Make sure that the arrangement of accessories does not produce any crush or shearing zones for the resident when the backrest and leg rest are adjusted. If this cannot be guaranteed, the user must safely prevent the resident from adjusting the backrest and leg rest.
  To do this, place the handset out of reach (e.g. at the foot end of the bed) or lock the handset adjustment options.

Preventing damage to property

In order to minimise any potential damage to property, please observe the following general information on selecting and attaching accessories:

- Attach accessories only for as long as they are required and only at the positions intended for them, taking care to avoid damaging the surfaces of the bed and accessories.
- Avoid chafing, for example, or the unprotected attachment of metal clamps to coated or varnished surfaces.
- Please note when moving the bed that attached accessories may extend beyond the height, width or length of the bed and so may collide more easily with door frames, corners of walls and other obstructions
- In the case of very long accessories such as patient lifting poles, infusion poles, extensions, mobilisation aids etc., avoid applying high lateral forces to these, such as by manoeuvring the bed using the infusion pole. This will prevent any overloading of the fixing points.

Up-to-date lists of accessories can be obtained from Burmeier and the company's sales partners. Please quote the bed model. Here are some examples of accessories:

Patient lifting pole with grab handle	LED reading lamps, various	Protective covers for safety sides
Infusion stand/holder	Wall spacers	Under bed light

Mattress requirements

Basic dimensions:

Length x width	200 x 90 cm (option: 200 x 100 cm)
Thickness/height	max. 19 cm, for further details see chapter 4.6
Foam density	at least 40 kg/m^3
Compression hardness	at least 4.5 kPa
Applicable standards:	DIN 13014
	DIN 597 Part 1 and 2

9 Technical data

All the indicated dimensions and weights in this manual are approximate.

9.1 DIMENSIONS AND WEIGHTS

Mattress base (LxW)	200 x 90 cm (standard) (optional equipment: 220 x 90 cm) with bed extension
Empty weight	128 kg
Safe working load	225 kg
Total weight of the bed	360 kg, maximum
Max. mattress dimensions * (LxWxH)	LxW: 200 x 90 cm Max. height: 15 cm / 19 cm, depending on type of mattress base (see chapter 4.6)
External dimensions (LxW)	237 x 98 cm

* More information about mattress:

- Volume weight: at least 38 kg/m^3
- Compression hardness: at least 4.5 KPa (in edge area)

9.2 ADJUSTMENT RANGES

Backrest angle	0° to approx. 70°
Thigh rest angle	0° to approx. 40°
Reverse-Trendelenburg angle	Approx. 12°
Trendelenburg angle	Approx. 12°
Mattress base height	From approx. 15 to approx. 80 cm

9.3 ELECTRICAL DATA

Control unit for external power adapter:

Type	LINAK CB06 OpenBus®
Input voltage	20-34 V DC
Max. current input	DC 8 A
Internal device fuse	2-fold electronic, automatic-resetting overload protection;
Duty cycle	Duty cycle: 2 min ON / 18 min OFF
Protection category	IP X6
Classification	Protection Class II, Type B, MPG classification Class I, not for use in explosive atmospheres

Control unit with internal transformer

Type	LINAK CB06 OpenBus®
Input voltage	AC 230 V, ± 10 %, 50/60 Hz
Max. current input	AC 2 A
Output voltage	DC 24 V
Internal device fuse	2-fold electronic, automatic-resetting overload protection;
Duty cycle	Intermittent duty 2min ON / 18min OFF
Protection category	IP X6
Classification	Protection Class II, Type B, MPG classification Class I, not for use in explosive atmospheres

External power adapter

Type	LINAK SMPS 20
Input voltage	AC 230 V, ± 10 %, 50/60 Hz
Mains plug of power adapter	2-pole – Europlug (EN50075)
Current input	AC max. 2.5 A
Output voltage	DC 30 V
Output current, electronically limited,	Max. 10 A Activated via remote signal
Duty cycle	Intermittent duty: 2 min ON / 18 min OFF
Protection category	IP X4
Classification	Protection class II, type B, not for use in explosive atmospheres
Output cable	Approx. 2.5 m, with special plug, 4-pole

Handset

Type	Linak HL75
Protection category	IP X4

Additional handset for Trendelenburg/reverse-Trendelenburg position (optional equipment)

Type	Linak HL7
Protection category	IP X4

Electric motors for mattress base height

Type	Linak LA 27
Force/installation dimension/lift	4000 N/ 500 mm/ 330 mm
Path feedback	Digital Hall
Input voltage	Max. DC 34 V
Duty cycle	Duty cycle: 2 min ON / 18 min OFF
Protection category	IP X4

Electric motor for backrest

Type	Linak LA 27
Force/installation dimension/lift	4000 N/ 438 mm/ 200 mm
Input voltage	Max. DC 34 V
Duty cycle	Duty cycle: 2 min ON / 18 min OFF
Protection category	IP X4

Electric motor for thigh rest

Type	Linak LA 27
Force/installation dimension/lift	4000 N/ 272 mm/ 70 mm
Input voltage	Max. DC 34 V
Duty cycle	Duty cycle: 2 min ON / 18 min OFF
Protection category	IP X4

Battery (optional equipment)

Type	BA18031/00
Voltage/capacity	DC 24 V/ 1.2 Ah
Max. charging current/ charging time	0.3 A/ 8-10 h Charging only admissible with Linak control units
Protection category	IP X6

Noise level

Noise level during adjustments	Max. 48 dB(A)

9.4 AMBIENT CONDITIONS

The ambient conditions stated below must be maintained:

For storage/transport:

Storage temperature	Min. -10°C, max.+ 50°C	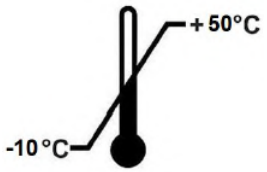
Relative air humidity (non-condensing)	Min. 20 %, max. 80 %	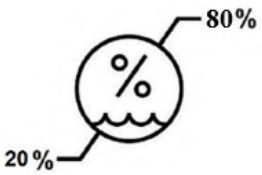
Air pressure (at altitude ≤ 3000 m)	Min. 700 hPa, max. 1060 hPa	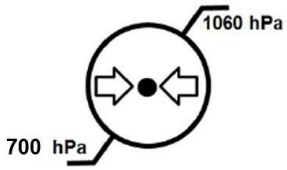

In operation:

Ambient temperature	Min. + 5°C, max. + 40°C	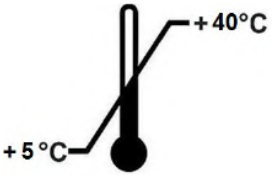
Relative air humidity (non-condensing)	Min. 20 %, max. 80 %	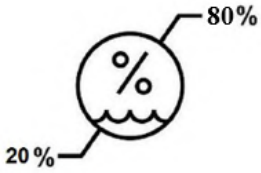
Air pressure (at altitude ≤ 3000 m)	Min. 700 hPa, max. 1060 hPa	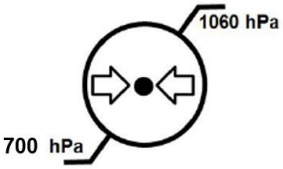

9.5 SYMBOLS SHOWN ON THE PRODUCT

9.5.1 Electrical data

The following type plate with bed-specific electrical data and other symbols is attached to the bed.

Type plate, example

Symbol	Meaning
	Device with type BF applied part in accordance with IEC 60601-1 (special protection against electric shock)
	Protection Class II device, double insulation
	Only for use in enclosed spaces – do not use outdoors
	Dispose of electrical components in accordance with the WEEE Directive. Do not dispose of as household waste!
IP X4	Protection of electrical equipment from water splashing from any direction

9.5.2 Type plate and PID bar code

See chapter 6.3

9.5.3 Stickers

Symbol	Meaning
	Conformity mark according to Medical Devices REGULATION (EU) 2017/745 (MDR)
	Safe working load (= max. permitted total weight of resident, mattress and all accessories attached)
	Maximum weight of occupant (= max. permissible weight of occupant; this is dependent on the total weight of all the accessories attached and is always less than the safe working load)
	Attention! Pay attention to the instruction manual
	Total bed weight, 360 kg maximum
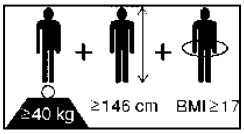	*Minimum* size/weight of occupant: Height: 146 cm, Weight: 40 kg; body mass index “BMI”: 17
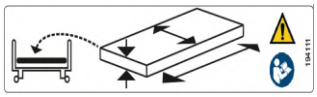	Only use mattresses that are approved by the manufacturer.
	Lock the handset functions if the resident could be at risk due to inadvertent motorised adjustments.
	Warning that feet could be crushed under the safety sides and guide rails when the bed is being lowered to its lowest position.

9.6 INFORMATION ON ELECTROMAGNETIC COMPATIBILITY (EMC)

Warning	– The use of accessories, transducers and cables other than those supplied by the manufacturer of this bed may result in increased electromagnetic emissions or reduced electromagnetic immunity of the bed and may lead to incorrect operation. – The use of this device next to other devices should be avoided, as this could result in incorrect operation. If such use is nevertheless necessary, this device and the other devices should be monitored to ensure that they are working properly. – Portable RF communication devices (radio, mobile phones etc.), including their accessories (such as antenna cables and external antennas) should not be used at a distance of less than 30 cm from the electrical parts and cables of this bed. Failure to observe this may result in a reduction in the performance of the device.
Warning	– The bed is intended for use in the electromagnetic environment described below. The operator or user of the bed should ensure that it is used in such an environment.

To ensure electromagnetically interference-free operation, use only the special cables and accessories that are approved by the manufacturer (see also chapter 6.3 “Replacement Parts”, chapter 9.3 “Electrical Data” and chapter 8 “Accessories”).

For the intended use as described in the main instruction manual, no significant performance limitations during the service life of this bed are known/expected as a result of possible electromagnetic interference from neighbouring devices.

This device is compliant with the following EMC standards regarding interference emissions and immunity:

Ambient limit values of the interference emissions		
Phenomenon	Professional healthcare facilities	Home healthcare environment
Conducted and radiated interference emissions	CISPR 11	CISPR 11
Harmonic distortions	See IEC 61000-3-2	See IEC 61000-3-2
Voltage fluctuations and flicker	See IEC 61000-3-3	See IEC 61000-3-3

Sheathing			
Phenomenon	**EMC basic standard or test method**	**Immunity test level**	
		Professional healthcare facilities	Home healthcare environment
Electrostatic discharge (ESD)	IEC 61000-4-2	+/- 8 kV contact	
		+/- 2 kV, +/- 4 kV ¸ +/- 8 kV, +/- 15 kV air, +/- 25 kV air	
High-frequency electromagnetic fields	IEC 61000-4-3	3 V/m; 80 MHz up to 2.7 GHz; 80% AM at 1 kHz	10 V/m; (80 MHz up to 2.7 GHz; 80% AM at 1 kHz)
High-frequency electromagnetic fields in the immediate vicinity of wireless communication devices	IEC 61000-4-3	See separate table zz (at the end of this chapter)	
Magnetic fields with rated power frequencies	IEC 61000-4-8	30 A/m; 50 Hz or 60 Hz	

AC port for supply input			
Phenomenon	**EMC basic standard**	**Immunity test level**	
		Professional healthcare facilities	Home healthcare environment
Electrical fast transients/ bursts	IEC 61000-4-4	+/- 2 kV; 100 kHz repetition frequency	
Electrical surges: conductor to conductor	IEC 61000-4-5	+/- 0.5 kV; +/- 1kV	
Conducted interference induced by high-frequency fields	IEC 61000-4-6	3 V; 0.15 MHz to 80 MHz; 6 V in ISM frequency bands between 0.15 MHz and 80 MHz 80% AM at 1 kHz	3 V; 0.15 MHz to 80 MHz; 6 V in ISM and amateur radio frequency bands between 0.15 MHz and 80 MHz 80% AM at 1 kHz
Voltage dips	IEC 61000-4-11	0% U_T; ½ cycle; at 0, 45, 90, 135, 180, 225, 270 and 315 degrees	
		0% U_T ; 1 cycle; and 70% U_T; 25 cycles; single-phase at 0 degrees	
Voltage interruptions	IEC 61000-4-11	0% U_T; 250 cycles	

Ports for signal input/signal output parts			
Phenomenon	**EMC basic standard**	**Immunity test level**	
		Professional healthcare facilities	Home healthcare environment
Electrostatic discharge (ESD)	IEC 61000-4-2	+/- 8 kV; contact +/- 2 kV, +/- 4 kV, +/- 8 kV, +/- 15 kV; +/- 25 kV air	
Electrical fast transients/ bursts	IEC 61000-4-4	+/- 1 kV; 100 kHz repetition frequency	
Conducted interference induced by high-frequency fields	IEC 61000-4-6	3 V; 0.15 MHz to 80 MHz; 6 V in ISM frequency bands between 0.15 MHz and 80 MHz 80% AM at 1 kHz	3 V; 0.15 MHz to 80 MHz; 6 V in ISM and amateur radio frequency bands between 0.15 MHz and 80 MHz 80% AM at 1 kHz

Table zz: Test specifications for the immunity of sheathings to high-frequency wireless communication equipment

Test frequency MHz	Frequency band	Radio service	Modulation	Max. power [W]	Distance [m]	Immunity test level [v/m]
385	380 to 390	TETRA 400	Pulse modulation 18 Hz	1.8	0.3	27
450	430 to 470	GMRS 460 FRS 460	FM +/- 5% deviation, 1 kHz sine wave	2	0.3	28
710 745 780	704 to 787	LTE band 13, 17	Pulse modulation 217 Hz	0.2	0.3	28
810 870 930	800 to 960	GSM 800/900 TETRA 800 iDEN820, CDMA 850, LTE band 5	Pulse modulation 18 Hz	2	0.3	28
1720 1845 1970	1700 to 1990	GSM 1800 CDMA 1900, GSM 1900, DECT, LTE band 1; 3; 4; 25; UMTS	Pulse modulation 217 Hz	2	0.3	28
2450	2400 to 2570	Bluetooth, WLAN 802.11 b/g/n, RFID 2450, LTE band 7	Pulse modulation 217 Hz	2	0.3	28
5240	5100 to 5800	WLAN 802.11 a/n	Pulse modulation 217Hz	0.2	0.3	9

9.7 CLASSIFICATION

- This bed fulfils all the requirements of the Medical Device Regulation (EU) 2017/745 (MDR).
- This bed is classified as a Class I active medical product with type BF application parts.
- UMDNS code: 10-347; Bed (electrically adjustable)
- CDN code: Y181210: SUPPORTS OR TECHNICAL AIDS FOR DISABLED PERSONS: ORTHOPAEDIC BEDS, 2 ARTICULATIONS, ELECTRIC
- For use in the following application environments in accordance with IEC 60601-2-52:

3:	Long-term care in a medical facility in which medical supervision is required and monitoring is provided if required. A medical electrical device used in medical procedures can be provided to help maintain or improve the condition of the PATIENTS. (E.g. retirement and nursing homes, rehabilitation facilities and geriatric institutions)
4:	Care in the home. A medical electrical device is used to alleviate or compensate for injuries, disabilities or illnesses.

10 Dismantling the bed

- Move the backrest, thigh rest and lower leg rest to a horizontal position.
- Move the mattress base to the highest position.
- Disconnect the power plug/power adapter plug from the mains socket.
- Remove the patient lifting pole.
- Remove the safety side bars, see chapter .
- Remove the side panels.
- Disconnect the plug from the thigh rest motor.
- Take the connecting cables of the lift and thigh rest motors out of their guides.
- Remove the 4 middle connecting screws of the mattress base.
- Remove the screws that connect the mattress base to the head section chassis and foot section chassis.

Risk of injury

Failure to observe this instruction can result in injuries and damage to property due to bed components falling down or falling over.

- From now on, do not move the bed from where it is standing, since the components are no longer screwed together.

- Plug the power adapter plug back into the mains socket.
- Move the bed to the lowest position.
- Disconnect the power adapter plug from the mains socket.
- Disconnect the plugs from the lift motors.
- Pull the head section chassis and foot section chassis out of the mattress base.
  Caution: Do not let the mattress base fall to the ground.
- Separate the two halves of the mattress base by pulling them apart.

If the bed is to be placed on a storage aid:

- Connect the two chassis to the transport and storage aid. To do this, use the four connecting screws of the mattress base frame.
- Place the two halves of the mattress base into the transport and storage aid.
- Place the patient lifting pole and the safety side bars into the storage aid.

11 Disposal instructions

- The operator must ensure that all components of the bed that are to be disposed of are not infectious or contaminated.
- If the bed is to be scrapped, the wood, synthetic and metallic parts are to be separated and disposed of properly.
- If you have any queries you can contact your local municipal waste company or our customers service department; you will find our address in chapter 6.4.

Disposal of electrical parts

- This bed – insofar as it is electrically adjustable – is classified as commercially used electrical equipment (B2B) in accordance with the WEEE Directive 2012/19/EC (implemented in Germany in the law governing electrical equipment).
- The electrical components used are free from prohibited hazardous substances in compliance with the RoHS II directive 2011/65/EU.

- Replaced electrical components (drives, control units, handsets etc.) must be treated as electrical waste in accordance with the WEEE Directive 2012/19/EU and disposed of accordingly.
- The operator of this bed is legally obliged to send the electrical components directly to the manufacturer and not to dispose of them at municipal waste collection points. BURMEIER and its service and sales partners will take these components back.
- The return of these components is covered by our General Terms and Conditions.

Disposal of rechargeable batteries

- Batteries that are no longer usable and have been removed must be disposed of properly in accordance with the battery regulations as set out in directive 2006/66/EC and do not belong in household waste.
- If you have any queries, you can contact your local municipal waste company or our service centre, see chapter 6.4.

In other countries outside Germany or the EU, the relevant national regulations must be complied with.

12 Declaration of conformity

We, Burmeier GmbH & Co. KG, in our sole responsibility as the manufacturer, hereby declare that this product complies with the provisions of REGULATION (EU) 2017/745 OF THE EUROPEAN PARLIAMENT AND THE COUNCIL of 5 April 2017 (MDR).

The full latest version of the declaration of conformity is available on request from our customer service centre (for contact details please refer to chapter 6.4) or go to the dealer area on our website.

Notes

Notes

Notes

STIEGELMEYER

Australian Distributor

EVOCARE AUSTRALIA PTY LIMITED

A.B.N. 98 078 566 604

Trading as **EVOCARE** and **L&M EQUIPMENT**

P.O. Box 1144, Stafford Qld. 4053

Ph: 07 3355 8000 Fax: 07 3355 5043

Website: http://www.evocare.com.au

Email: sales@evocare.com.au

workshop@evocare.com.au

warehouse@evocare.com.au

accounts@evocare.com.au

Published by:

Burmeier GmbH & Co. KG

(A Stiegelmeyer-Group company)

Pivitsheider Strasse 270 • 32791 Lage/Lippe, Germany

Tel.: +49 (0) 52 32/98 41- 0 • Fax: +49 (0) 52 32/98 41- 41

Email: info@burmeier.com

Internet: www.burmeier.com

CE

No part of this manual may be
reproduced without the prior written permission of the publisher.
All rights reserved.
Subject to technical changes without notice!